STANDARD No. 3 COMBINATION INLET AND MANHOLE

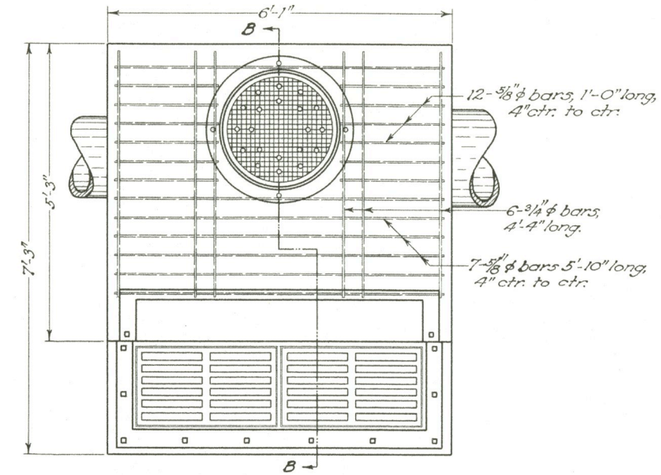

PLAN

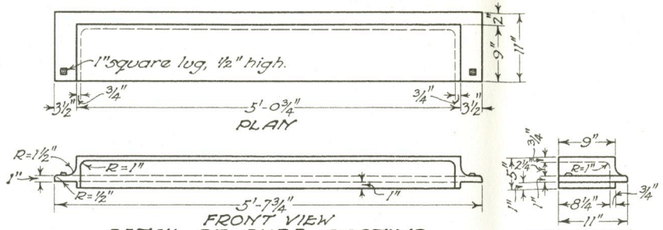

PLAN

FRONT VIEW

DETAIL OF CURB CASTING

SIDE VIEW

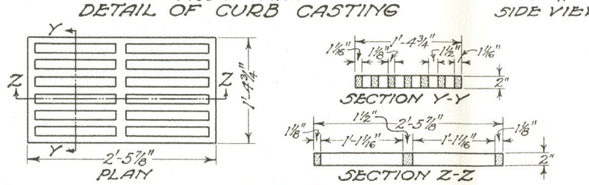

PLAN

SECTION Y-Y

SECTION Z-Z

DETAIL OF GUTTER GRATES

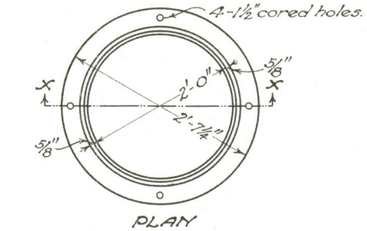

PLAN

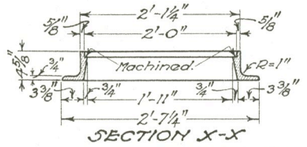

SECTION X-X

DETAIL OF MANHOLE CASTING

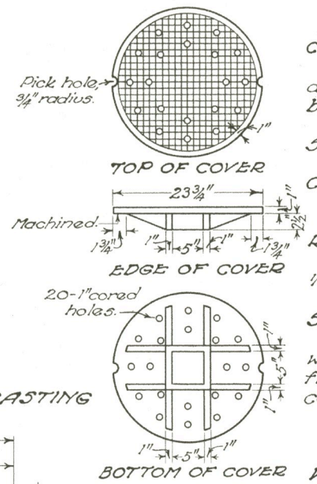

NOTES

GENERAL

CASTINGS:—
All castings may be made in accordance with details shown herewith, or may be of similar design but of equal weight.
All castings to be in accordance with Section M-7.8 of the Material Details.

CONCRETE:—
Concrete shall be 1:5 1/2 mix.

REINFORCING STEEL:—
All reinforcing steel in walls shall be 1/2" round bars at 12" centers.

STEPS:—
Steps shall be of good quality wrought iron (Section M-7.6) free from cracks and painted with two coats of red lead.

INLET CASTINGS

WEIGHTS:—

Curb Casting	250 lbs.
Two Grates	280 lbs.
Gutter Frame	650 lbs.

MANHOLE CASTINGS

BEARING AREAS:—
Bearing areas of frame and cover shall be machined to provide a firm and even seat for the cover.

WEIGHT:—
The weight of manhole casting and cover to be 250 lbs.

SETTING OF CASTING:—
The base of the frame shall be set in a full bed of Portland Cement mortar, and so adjusted as to conform to the finished grade and slope of the adjacent surface.

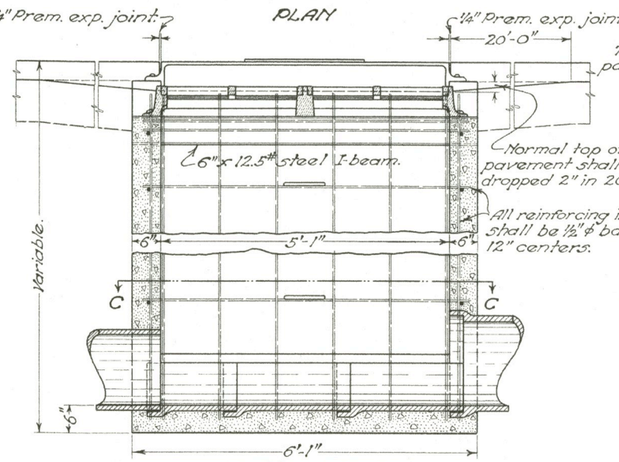

SECTION A-A

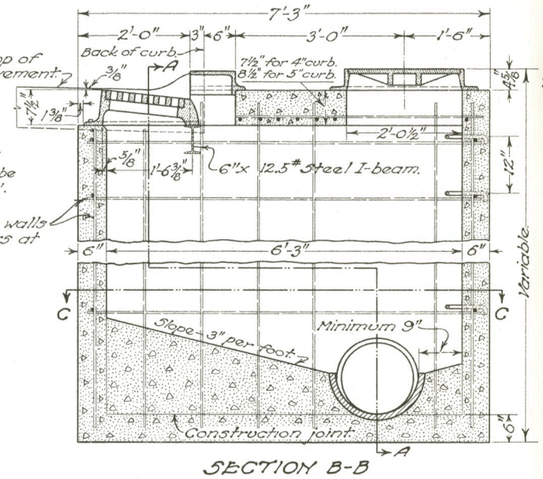

SECTION B-B

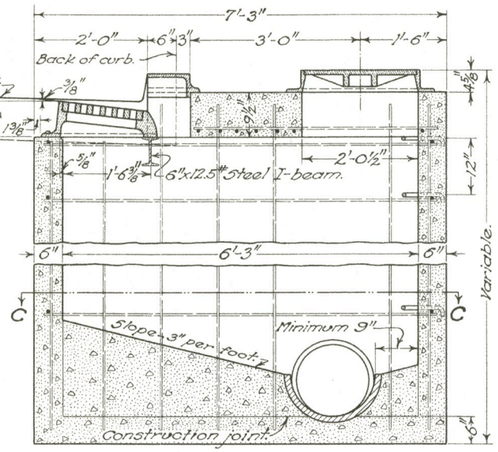

SECTION B-B
For curb 6" high only.

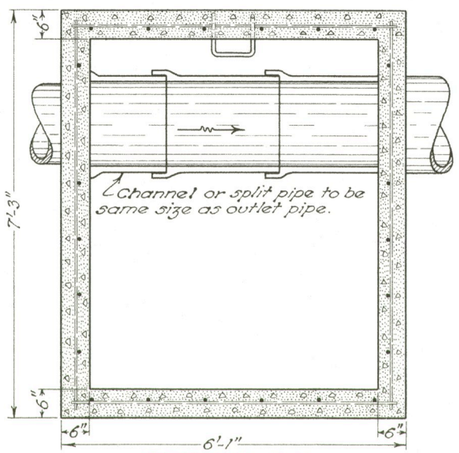

SECTION C-C

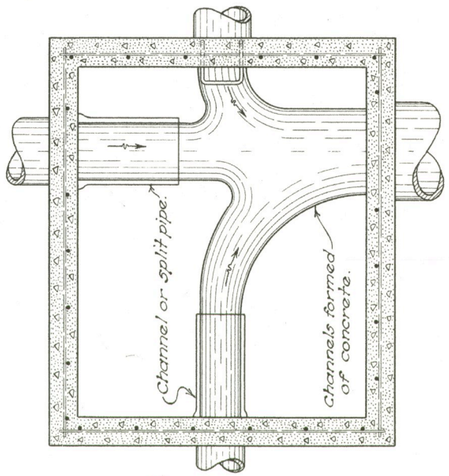

SECTION C-C
Showing method of turning side drains.

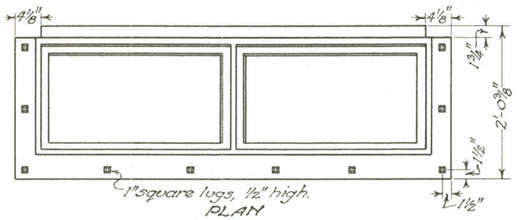

PLAN

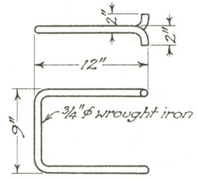

DETAIL OF STEP

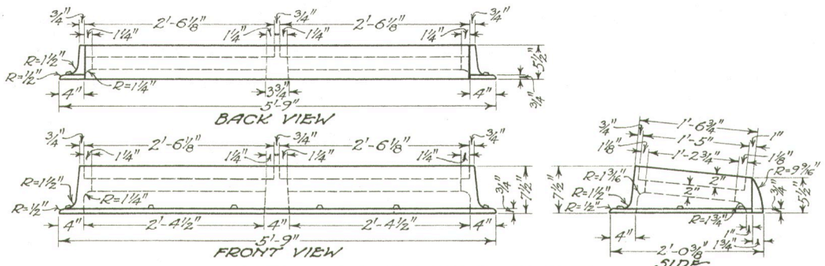

BACK VIEW

FRONT VIEW

SIDE

DETAIL OF GUTTER FRAME

BUREAU OF LOCATION & DESIGN
OHIO
DEPARTMENT OF HIGHWAYS

STANDARD MANHOLE

STANDARD CONSTRUCTION DRAWING

I-8 M.H.
No. 3

OCT. 1933
APRIL-1934

APPROVED _____ CHIEF ENGINEER

STANDARD No. 3 COMBINATION INLET AND MANHOLE

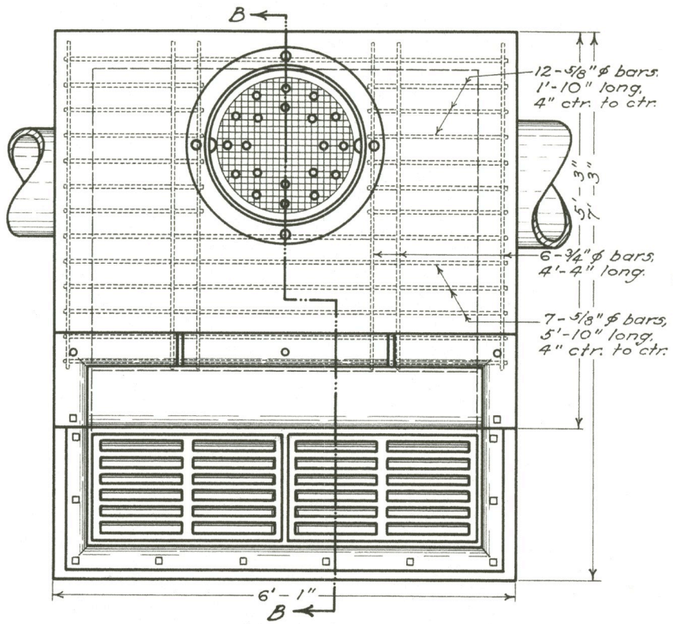

PLAN

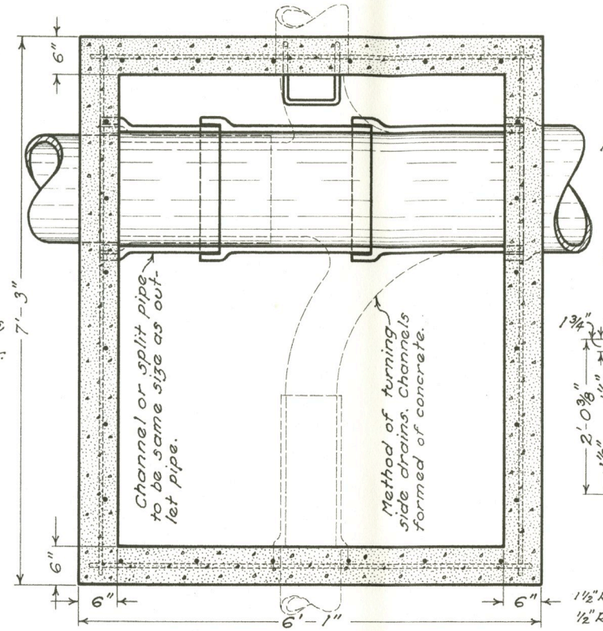

SECTION C-C

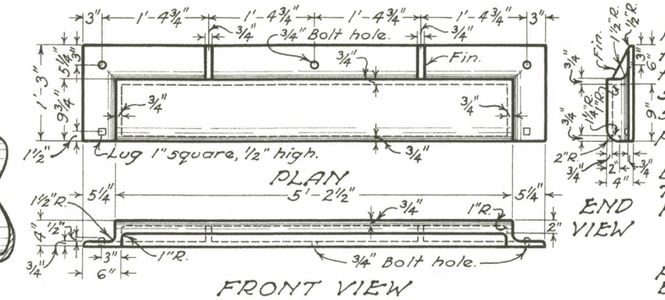

CURB CASTING

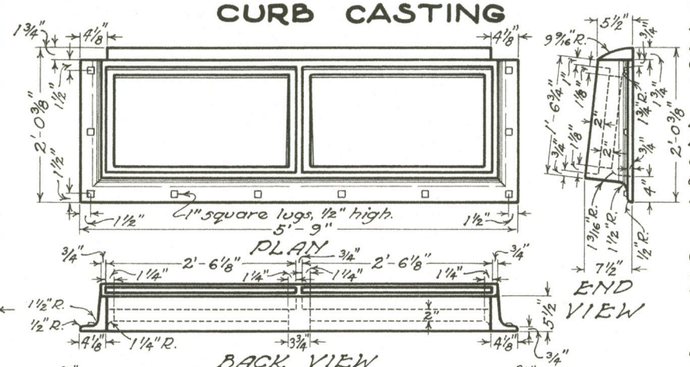

GUTTER FRAME

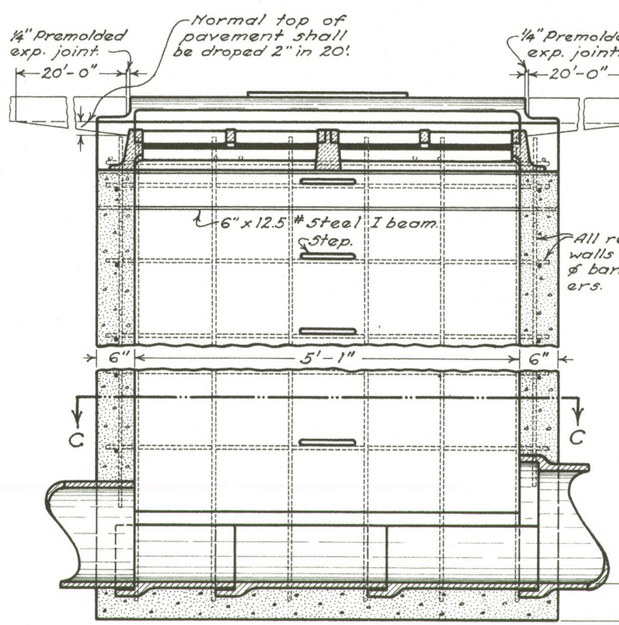

SECTION A-A

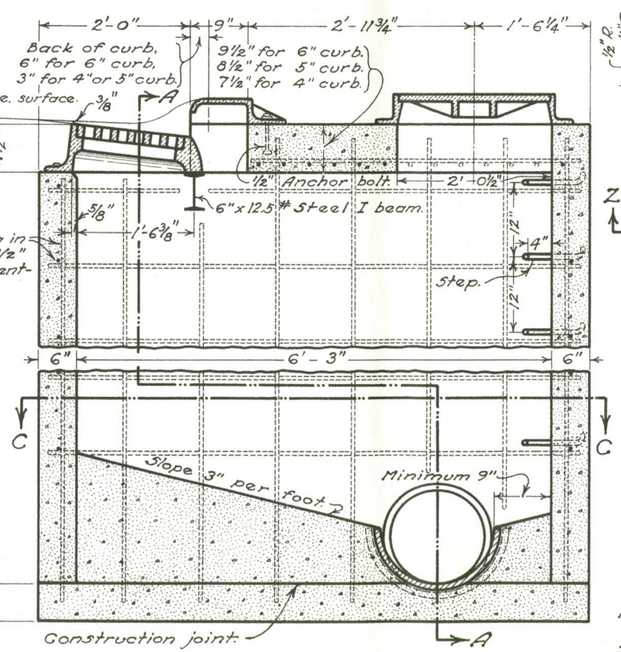

SECTION B-B

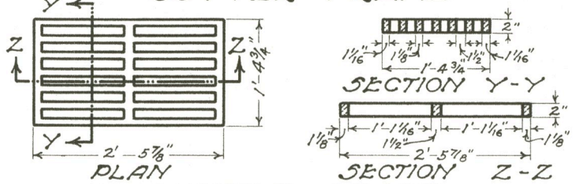

GUTTER GRATE

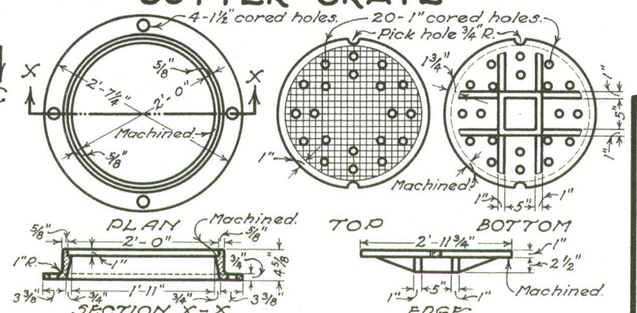

MANHOLE CASTINGS

NOTES

CASTINGS shall be of cast iron in accordance with Material Details. The designs shall be essentially the same and equally as strong as those shown hereon, and shall be given one coat of asphaltum paint as per specifications.

REINFORCING steel in walls shall be ½" round bars at 12" centers. Top to be reinforced as shown hereon.

CONCRETE shall be 1-5½ mix.

BRICK side walls, when used in place of reinforced concrete, shall be 8" in thickness, laid in Portland cement mortar, every sixth course to be a stretcher course, and to be plastered on the inside and outside with 1-2 cement mortar ½" thick.

STEPS shall be of good quality wrought iron in accordance with Material Details, free from cracks and shall be given one coat of asphaltum paint as per specifications.

INLET CASTINGS

WEIGHTS approximately :-

Curb casting	320 lbs.
Gutter frame	650 lbs.
Two grates	280 lbs.

MANHOLE CASTINGS

WEIGHT of manhole frame and cover to be approximately 250 lbs.

BEARING AREAS of frame and cover shall be machined to provide a firm and even seat for any portion of the cover. Frame and cover to be matched and marked.

SETTING OF CASTINGS :- The base of the frame shall be set in a full bed of Portland cement mortar, and so adjusted as to conform to the finished grade and slope of the adjacent surface.

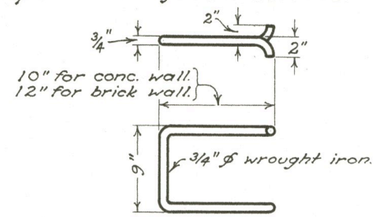

STEP

BUREAU OF LOCATION & DESIGN
OHIO DEPARTMENT OF HIGHWAYS

10 - 1933
4 - 1934
2-20-36

STANDARD MANHOLE

STANDARD CONSTRUCTION DRAWING

I-8 M.H.
No. 3

APPROVED H.L.R. CHIEF ENGINEER

STANDARD No. 3 COMBINATION INLET AND MANHOLE

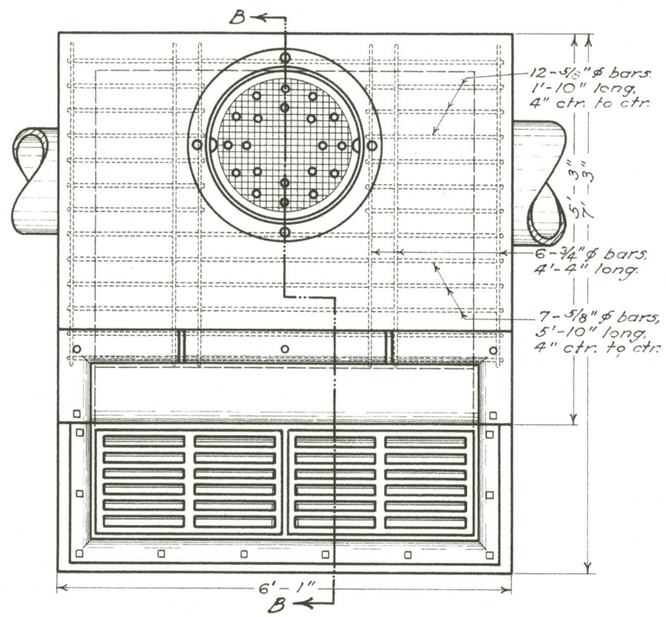

PLAN

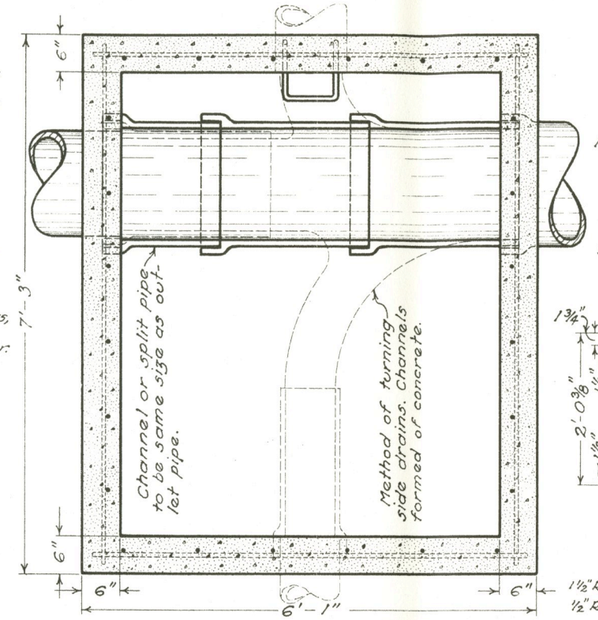

SECTION C-C

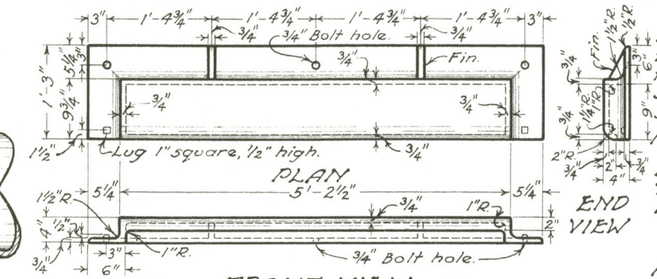

FRONT VIEW

CURB CASTING

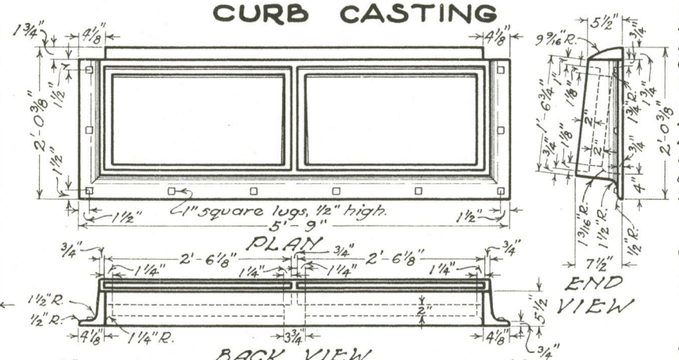

FRONT VIEW

GUTTER FRAME

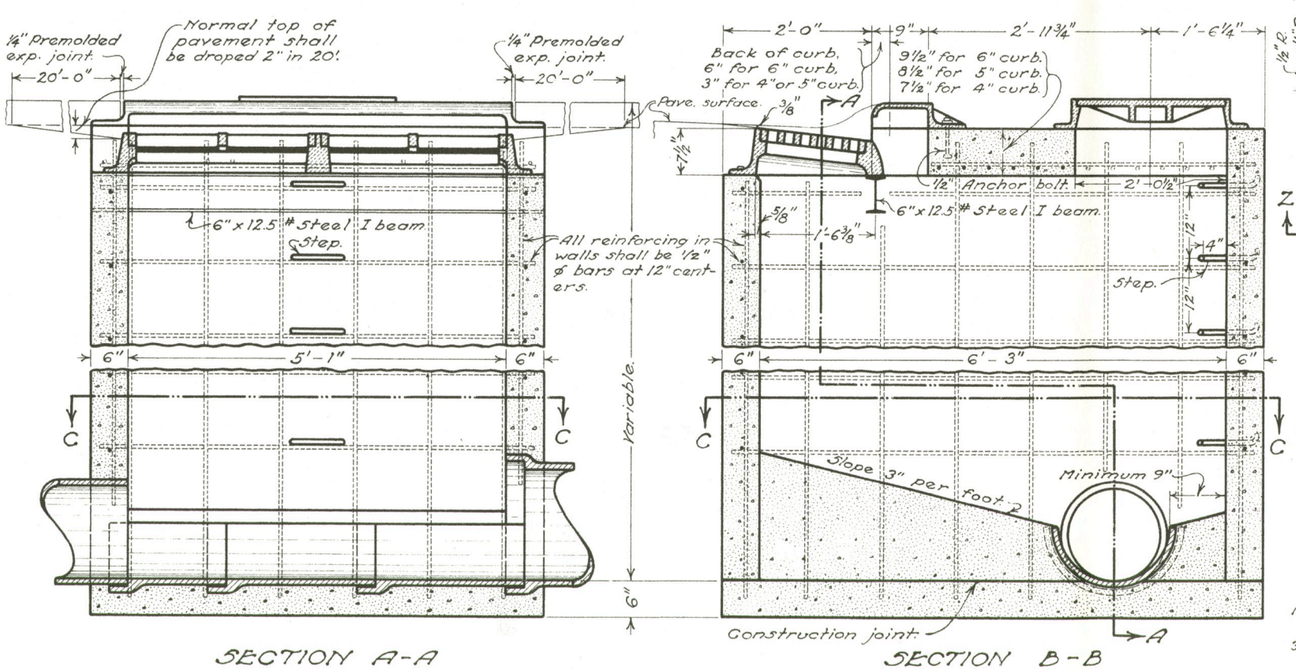

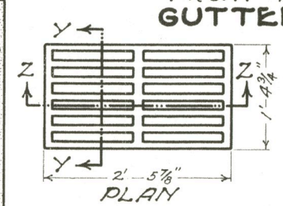

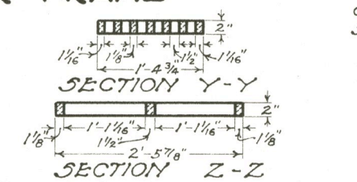

GUTTER GRATE

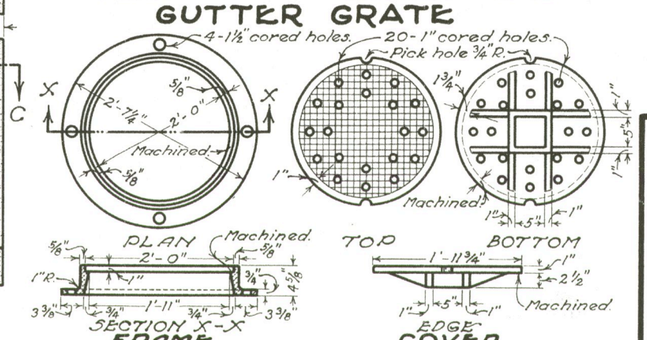

MANHOLE CASTINGS

NOTES

CASTINGS shall be of cast iron in accordance with Material Details. The designs shall be essentially the same and equally as strong as those shown hereon, and shall be given one coat of asphaltum paint as per specifications.

REINFORCING steel in walls shall be ½" round bars at 12" centers. Top to be reinforced as shown hereon.

CONCRETE shall be 1-5½ mix.

BRICK side walls, when used in place of reinforced concrete, shall be 8" in thickness, laid in Portland cement mortar, every sixth course to be a stretcher course, and to be plastered on the inside and outside with 1-2 cement mortar ½" thick.

STEPS shall be of good quality wrought iron in accordance with Material Details, free from cracks and shall be given one coat of asphaltum paint as per specifications.

INLET CASTINGS

WEIGHTS approximately :-

Curb casting	320 lbs.
Gutter frame	650 lbs.
Two grates	280 lbs.

MANHOLE CASTINGS

WEIGHT of manhole frame and cover to be approximately 250 lbs.

BEARING AREAS of frame and cover shall be machined to provide a firm and even seat for any portion of the cover. Frame and cover to be matched and marked.

SETTING OF CASTINGS :- The base of the frame shall be set in a full bed of Portland cement mortar, and so adjusted as to conform to the finished grade and slope of the adjacent surface.

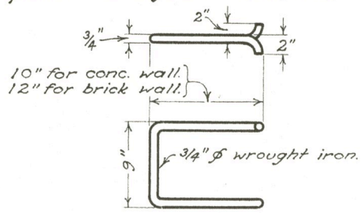

STEP

BUREAU OF LOCATION & DESIGN
OHIO DEPARTMENT OF HIGHWAYS

10 - 1933
4 - 1934
2-20-36
7-1-'38

STANDARD MANHOLE

STANDARD CONSTRUCTION DRAWING

I-8 M.H.
No. 3

APPROVED H.L.R. CHIEF ENGINEER

STANDARD No. 3 COMBINATION INLET-MANHOLE

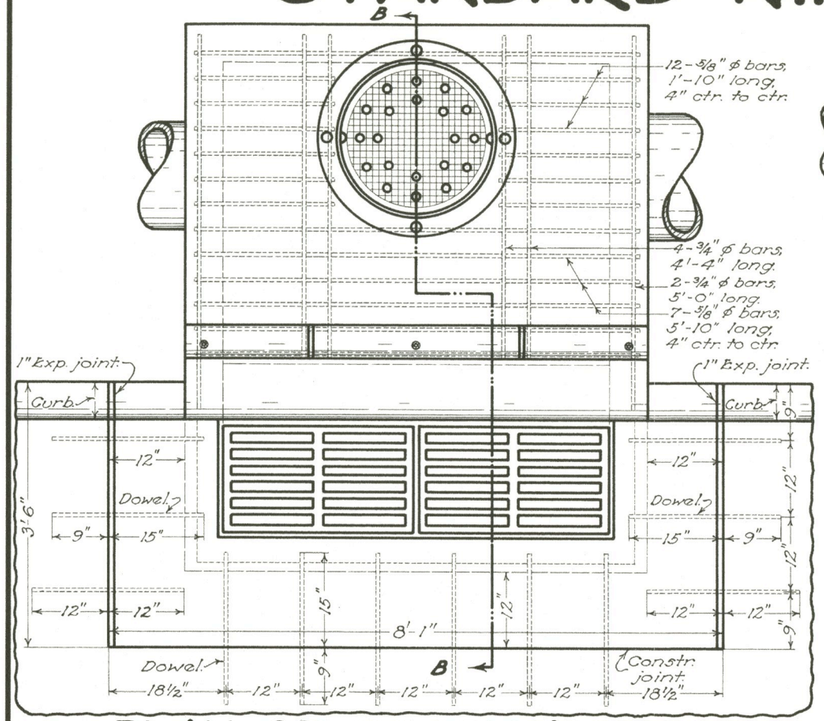

PLAN OF INLET-MANHOLE AND PAVEMENT JOINTS

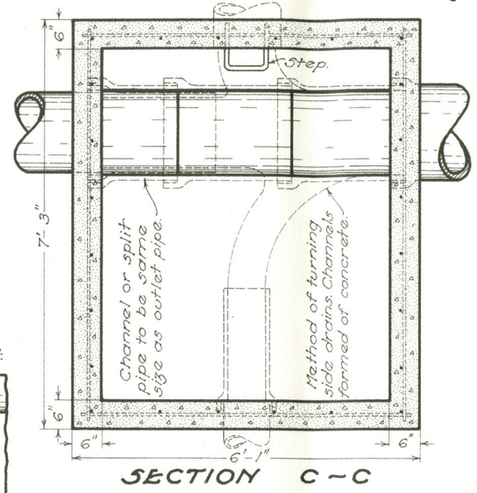

SECTION C-C

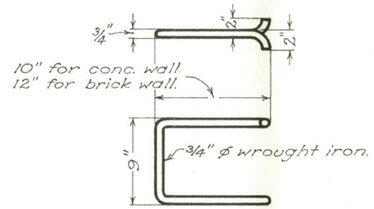

STEP

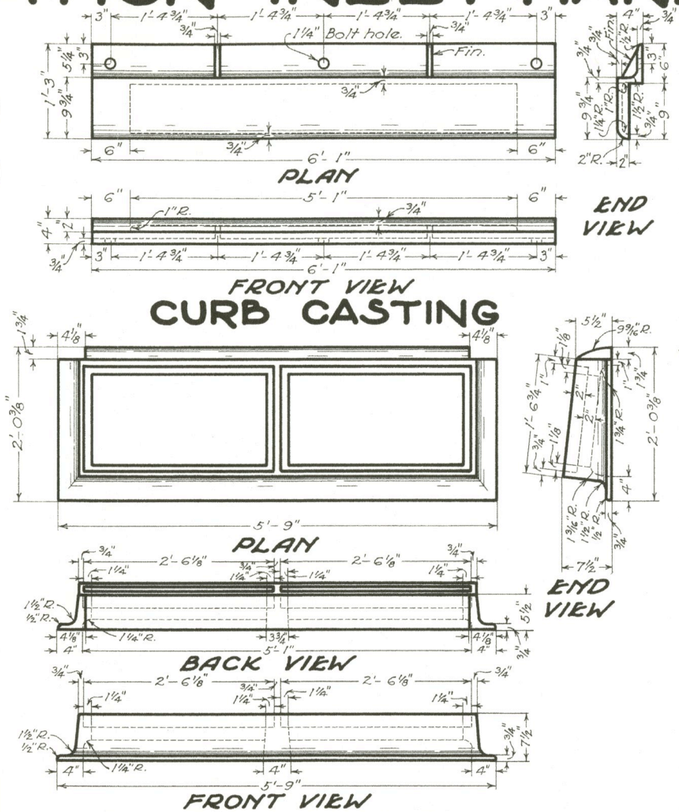

CURB CASTING

GUTTER FRAME

NOTES

CASTINGS shall be of cast iron in accordance with Material Details. The designs shall be essentially the same and equally as strong as those shown hereon, and shall be given one coat of asphaltum paint as per specifications.

REINFORCING steel in walls shall be ½" round bars at 12" centers and vertical in each corner. Top to be reinforced as shown hereon.

CONCRETE shall be 1-5½ mix.

BRICK side walls, when used in place of reinforced concrete, shall be 8" in thickness, laid in Portland cement mortar, every sixth course to be a stretcher course, and to be plastered on the inside and outside with 1-2 cement mortar ½" thick.

STEPS shall be of good quality wrought iron in accordance with Material Details, free from cracks and shall be given one coat of asphaltum paint as per specifications.

INLET CASTINGS

WEIGHTS approximately:—

Curb casting	320 lbs.
Gutter frame	650 lbs.
Two grates	280 lbs.

MANHOLE CASTINGS

WEIGHT of manhole frame and cover to be approximately 250 lbs.

BEARING AREAS of frame and cover shall be machined to provide a firm and even seat for any portion of the cover. Frame and cover to be matched and marked.

SETTING OF CASTING:— The base of the frame shall be set in a full bed of Portland cement mortar, and so adjusted as to conform to the finished grade and slope of the adjacent surface.

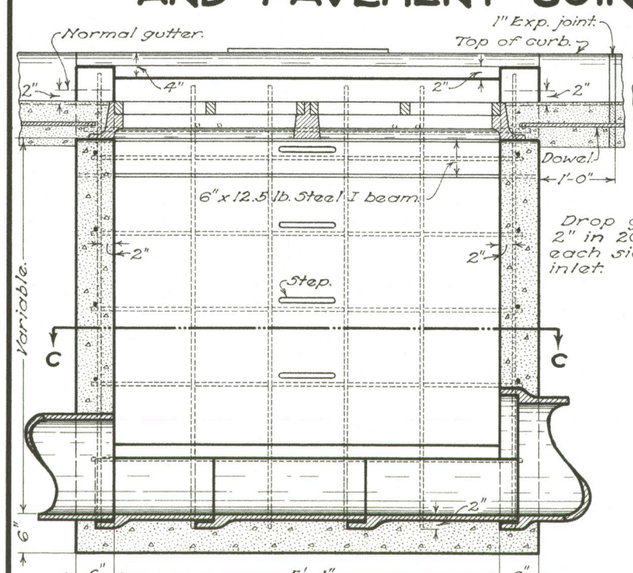

SECTION A-A

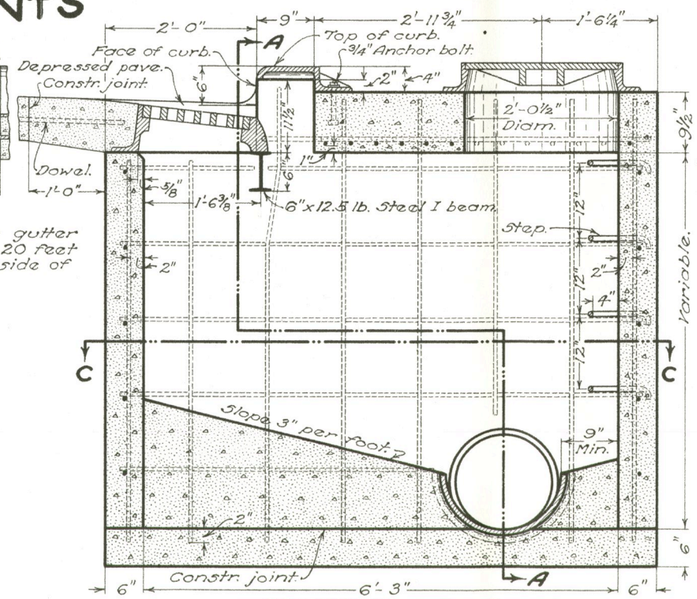

SECTION B-B

INLET-MANHOLE

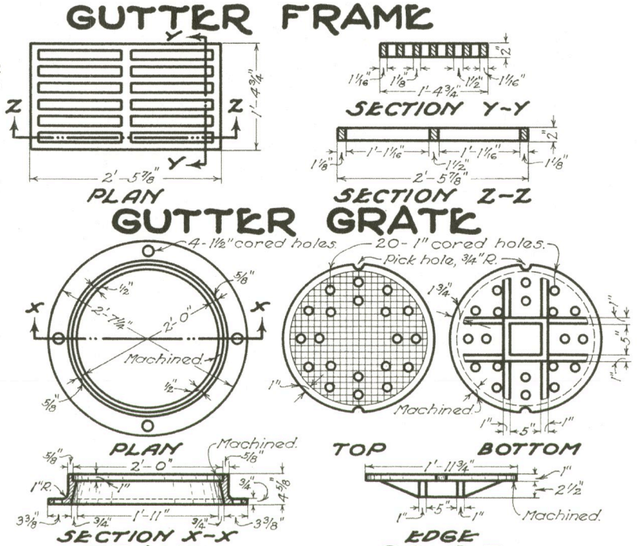

MANHOLE CASTINGS

BUREAU OF LOCATION & DESIGN
OHIO DEPARTMENT OF HIGHWAYS

INLET-MANHOLE

STANDARD CONSTRUCTION DRAWING

I-8 M.H. No. 3

APPROVED K. H. R. CHIEF ENGINEER

10 - 1933
4 - 1934
2-20-36
7-1-'38
12-15-38

STANDARD No. 3 COMBINATION INLET-MANHOLE

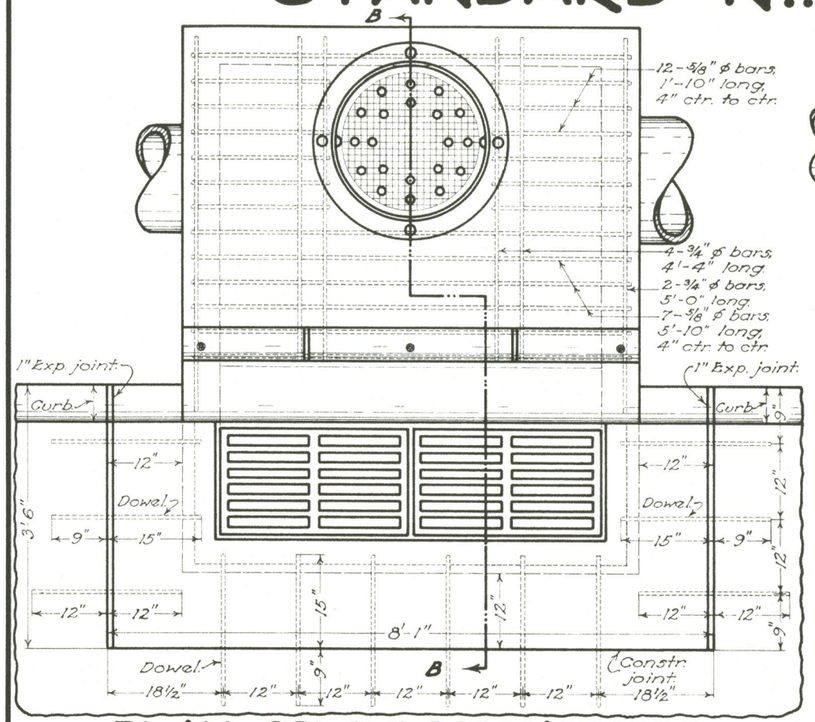

PLAN OF INLET-MANHOLE AND PAVEMENT JOINTS

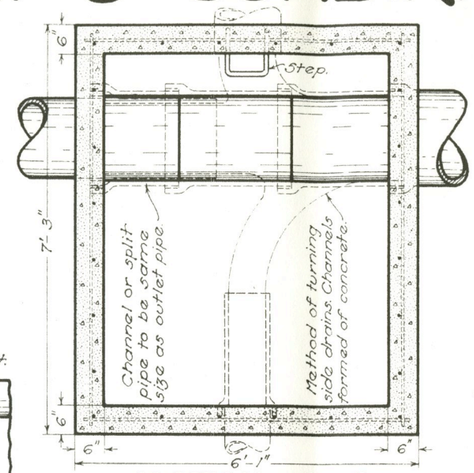

SECTION C-C

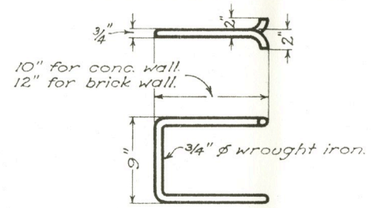

STEP

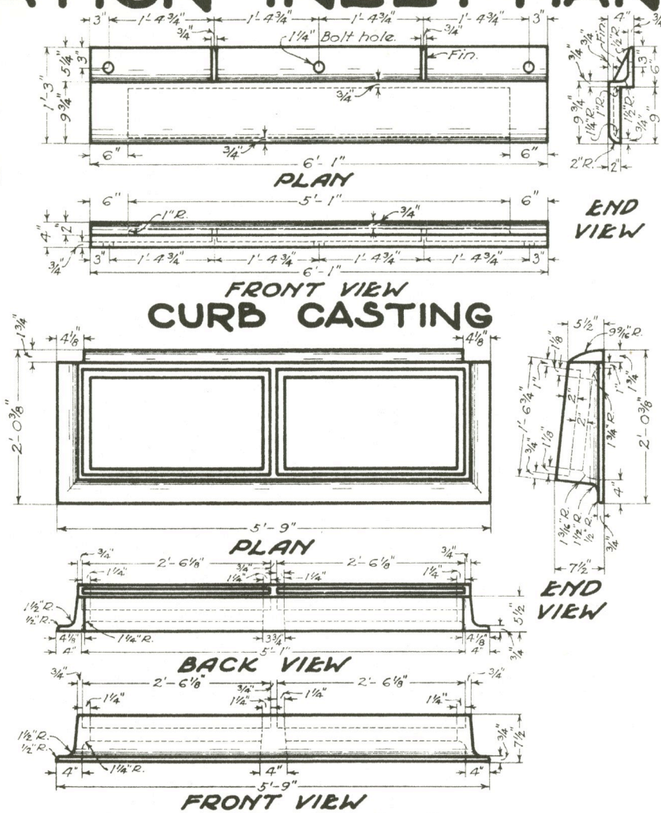

CURB CASTING

GUTTER FRAME

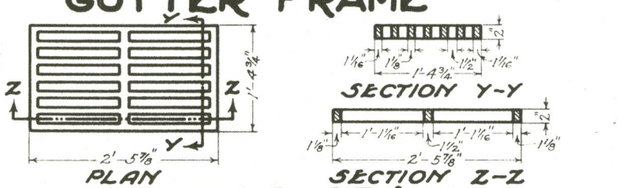

GUTTER GRATE

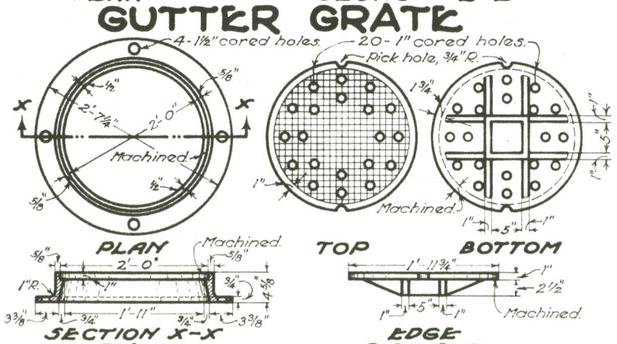

MANHOLE CASTINGS

NOTES

CASTINGS shall be of cast iron in accordance with Material Details. The designs shall be essentially the same and equally as strong as those shown hereon, and shall be given one coat of asphaltum paint as per specifications.

REINFORCING steel in walls shall be ½" round bars at 12" centers and vertical in each corner. Top to be reinforced as shown hereon.

CONCRETE shall be Class "C".

BRICK side walls, when used in place of reinforced concrete, shall be 8" in thickness, laid in Portland cement mortar, every sixth course to be a stretcher course, and to be plastered on the inside and outside with 1-2 cement mortar ½" thick.

STEPS shall be of good quality wrought iron in accordance with Material Details, free from cracks and shall be given one coat of asphaltum paint as per specifications.

INLET CASTINGS

WEIGHTS approximately:-

Curb casting	320 lbs.
Gutter frame	650 lbs.
Two grates	280 lbs.

MANHOLE CASTINGS

WEIGHT of manhole frame and cover to be approximately 250 lbs.

BEARING AREAS of frame and cover shall be machined to provide a firm and even seat for any portion of the cover. Frame and cover to be matched and marked.

SETTING OF CASTING :- The base of the frame shall be set in a full bed of Portland cement mortar, and so adjusted as to conform to the finished grade and slope of the adjacent surface.

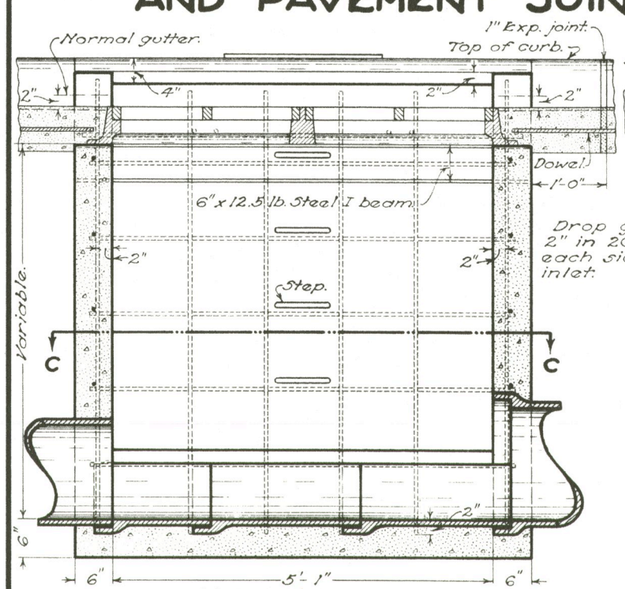

SECTION A-A

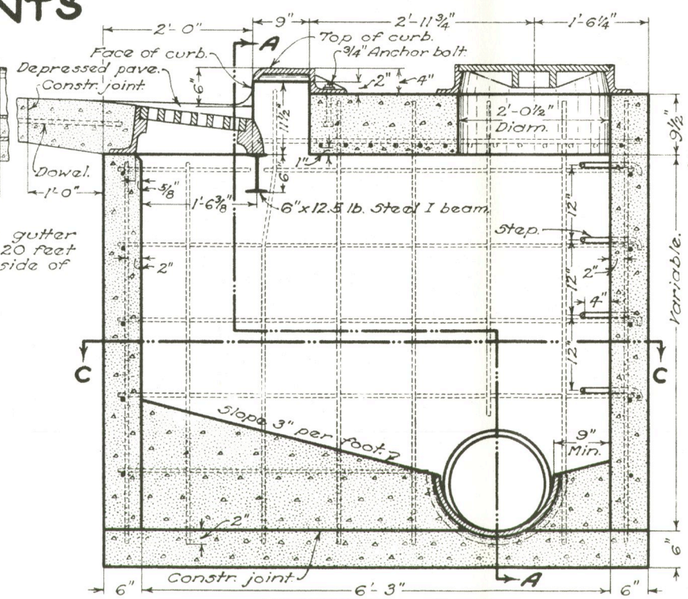

SECTION B-B

INLET-MANHOLE

BUREAU OF LOCATION & RIGHT OF WAY
OHIO DEPARTMENT OF HIGHWAYS

INLET-MANHOLE

STANDARD CONSTRUCTION DRAWING — I-8 M.H. No. 3

APPROVED G.S.L. CHIEF ENGINEER

DATE
10-1933
4-1934
2-20-36
7-1-38
12-15-38
3-1-39

STANDARD No. 3 COMBINATION INLET-MANHOLE

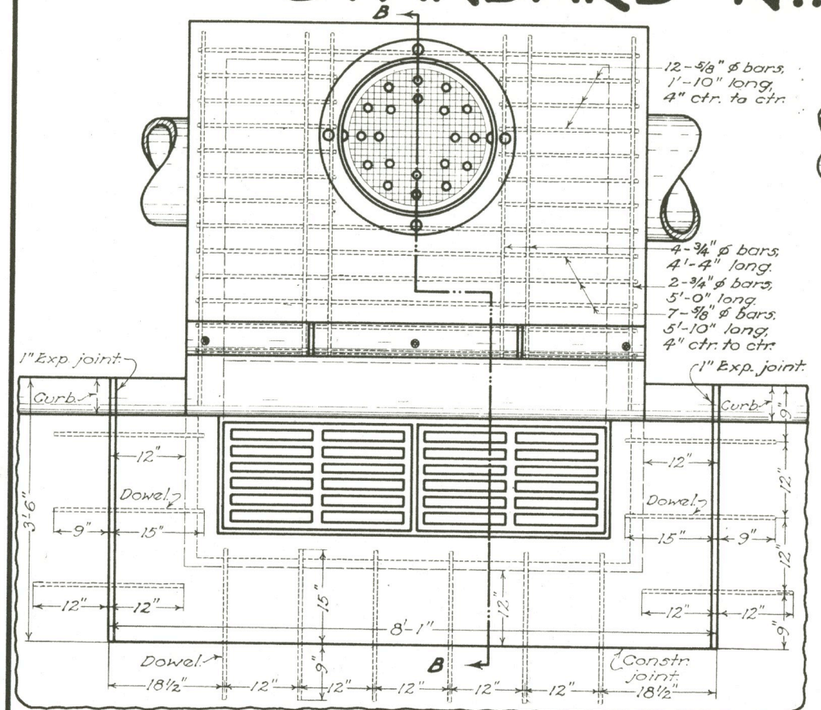

PLAN OF INLET-MANHOLE AND PAVEMENT JOINTS

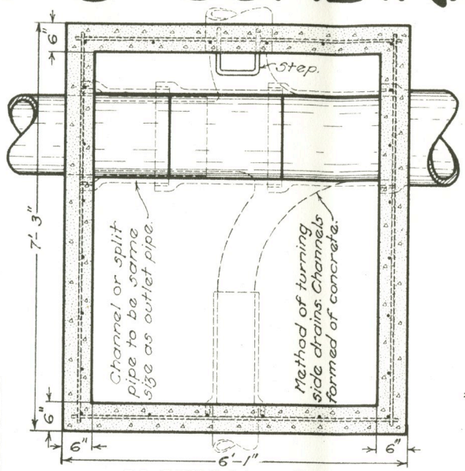

SECTION C-C

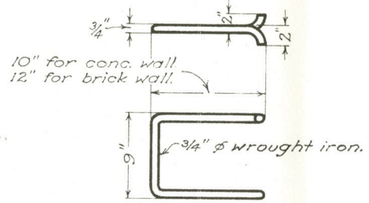

STEP

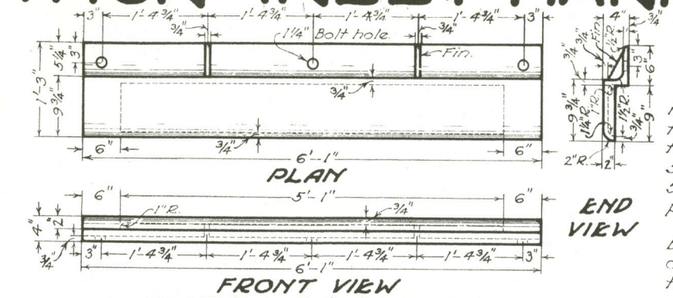

PLAN — END VIEW — FRONT VIEW

CURB CASTING

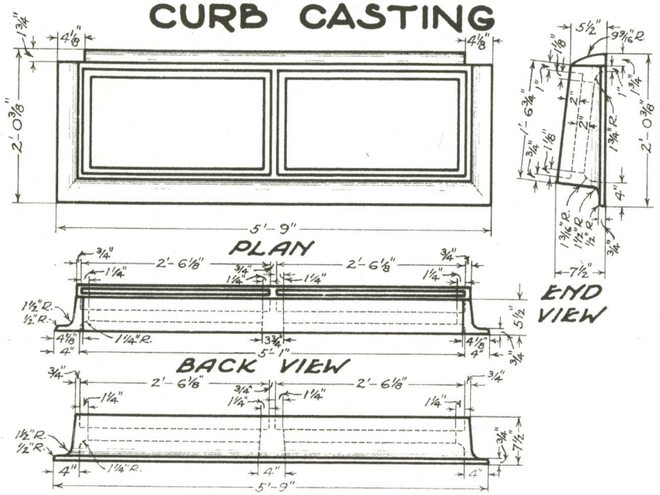

PLAN — END VIEW — BACK VIEW — FRONT VIEW

GUTTER FRAME

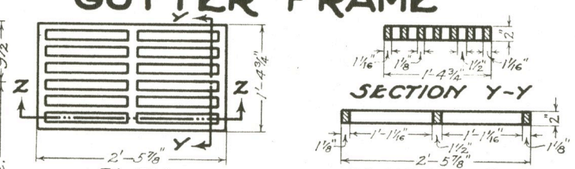

PLAN — SECTION Y-Y — SECTION Z-Z

GUTTER GRATE

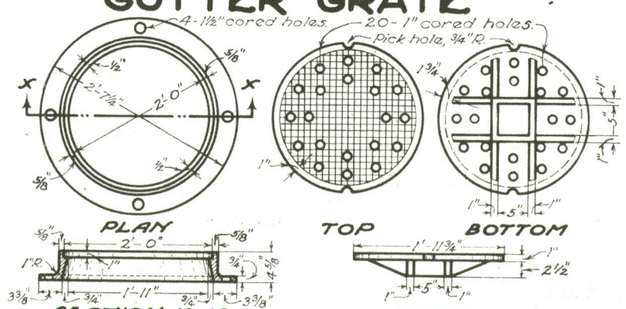

PLAN — TOP — BOTTOM — SECTION X-X — EDGE

FRAME — COVER

MANHOLE CASTINGS

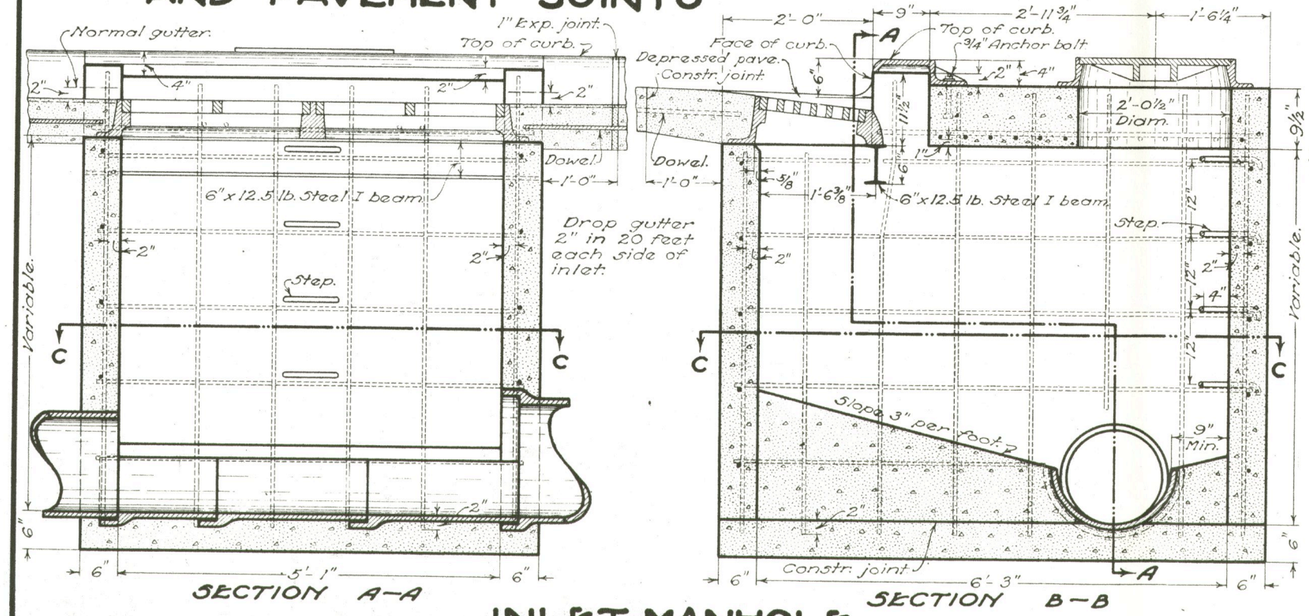

SECTION A-A — SECTION B-B

INLET-MANHOLE

NOTES

CASTINGS shall be of cast iron in accordance with Material Details. The designs shall be essentially the same and equally as strong as those shown hereon, and shall be given one coat of asphaltum paint as per specifications.

REINFORCING steel in walls shall be ½" round bars at 12" centers and vertical in each corner. Top to be reinforced as shown hereon.

CONCRETE shall be Class "C".

BRICK side walls, when used in place of reinforced concrete, shall be 8" in thickness, laid in Portland cement mortar, every sixth course to be a stretcher course, and to be plastered on the inside and outside with 1-2 cement mortar ½" thick.

STEPS shall be of good quality wrought iron in accordance with Material Details, free from cracks and shall be given one coat of asphaltum paint as per specifications.

INLET CASTINGS

WEIGHTS approximately:—

Curb casting	320 lbs.
Gutter frame	650 lbs.
Two grates	280 lbs.

BEARING AREAS of frame and grate shall be so fitted and finished as to provide a firm and even seat for all portions of the grate in the frame. No projections shall exist on bearing areas of either casting, and each grate shall seat in its frame without rocking. Frames and grates shall be fitted, matched and marked before delivery to the project.

MANHOLE CASTINGS

WEIGHT of manhole frame and cover to be approximately 250 lbs.

SETTING OF CASTING:— The base of the frame shall be set in a full bed of Portland cement mortar, and so adjusted as to conform to the finished grade and slope of the adjacent surface.

BUREAU OF LOCATION & RIGHT OF WAY
OHIO DEPARTMENT OF HIGHWAYS

INLET-MANHOLE

STANDARD CONSTRUCTION DRAWING — I-8 M.H. No. 3

APPROVED _____ CHIEF ENGINEER.

DATE
10-1933
4-1934
2-20-'36
7-1-'38
12-15-'38
3-1-'39
11-1-'39

STANDARD No. 3 COMBINATION INLET-MANHOLE

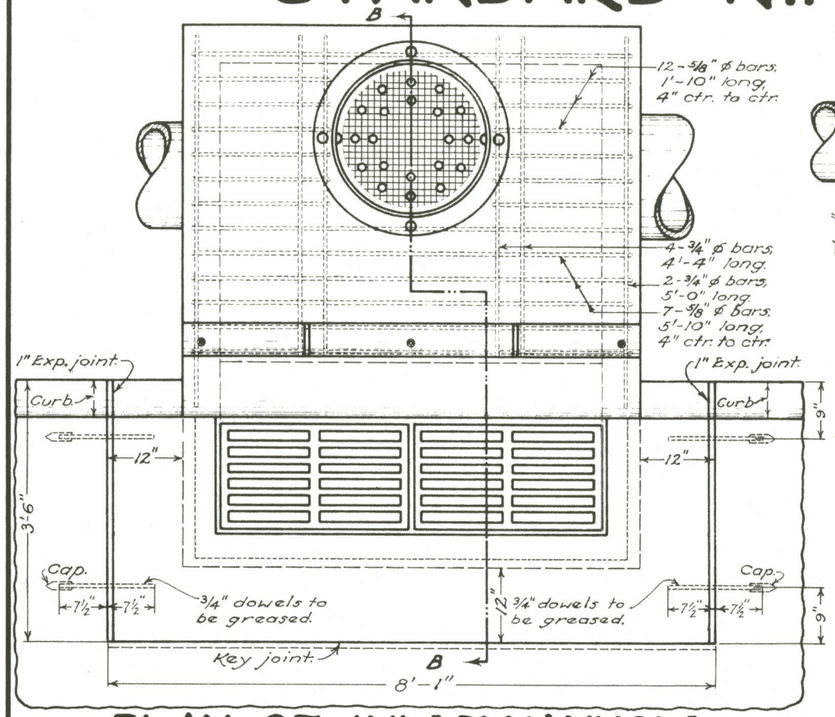

PLAN OF INLET-MANHOLE AND PAVEMENT JOINTS

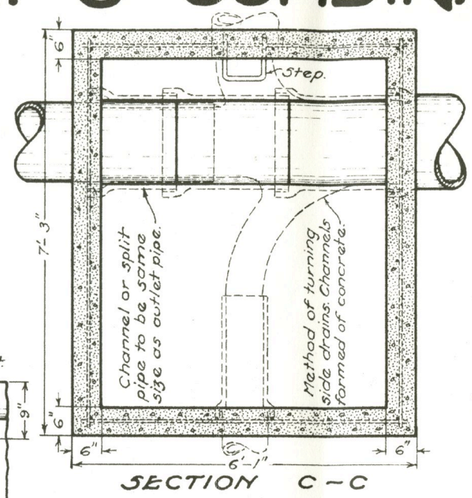

SECTION C-C

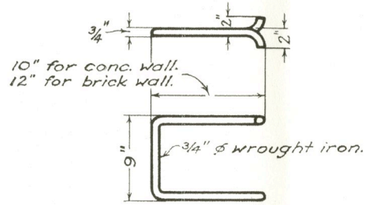

STEP

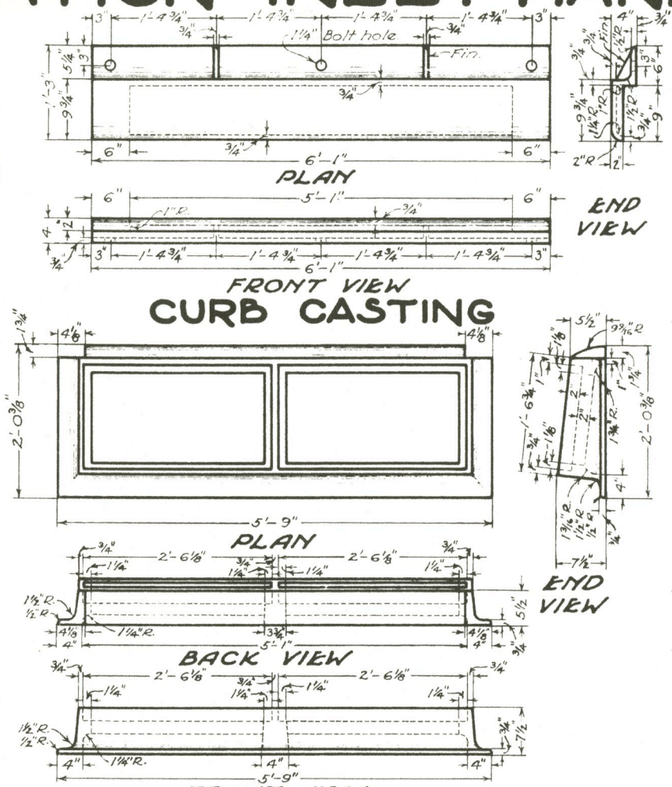

NOTES

CASTINGS shall be of cast iron in accordance with Material Details. The designs shall be essentially the same and equally as strong as those shown hereon, and shall be given one coat of asphaltum paint as per specifications.

REINFORCING steel in walls shall be ½" round bars at 12" centers and vertical in each corner. Top to be reinforced as shown hereon.

CONCRETE shall be Class "C".

BRICK side walls, when used in place of reinforced concrete, shall be 8" in thickness, laid in Portland cement mortar, every sixth course to be a stretcher course, and to be plastered on the inside and outside with 1-2 cement mortar ½" thick.

STEPS shall be of good quality wrought iron in accordance with Material Details, free from cracks and shall be given one coat of asphaltum paint as per specifications.

PAVEMENT:- The 8'-1" x 3'-6" portion blocked out of the pavement shall be placed after the casting has been set but shall be paid for as part of the pavement.

INLET CASTINGS

WEIGHTS approximately:-

Curb casting	320 lbs.
Gutter Frame	650 lbs.
Two grates	280 lbs.

BEARING AREAS of frame and grate shall be so fitted and finished as to provide a firm and even seat for all portions of the grate in the frame. No projections shall exist on bearing areas of either casting, and each grate shall seat in its frame without rocking. Frames and grates shall be fitted, matched and marked before delivery to the project.

MANHOLE CASTINGS

WEIGHT of manhole frame and cover to be approximately 250 lbs.

SETTING OF CASTING:- The base of the frame shall be set in a full bed of Portland cement mortar, and so adjusted as to conform to the finished grade and slope of the adjacent surface.

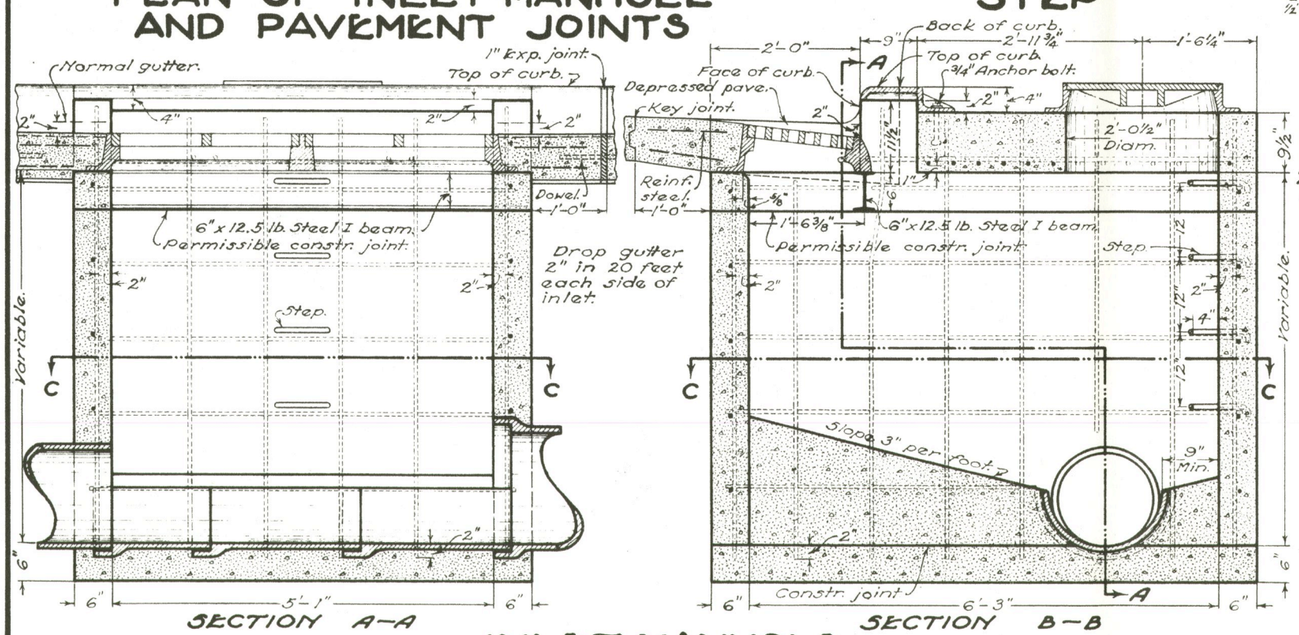

INLET-MANHOLE

BUREAU OF LOCATION & RIGHT OF WAY
OHIO DEPARTMENT OF HIGHWAYS

INLET-MANHOLE

STANDARD CONSTRUCTION DRAWING

I-8 M.H. No. 3

APPROVED M.D.S. CHIEF ENGINEER

DATE
10-1933
4-1934
2-20-'36
7-1-'38
12-15-'38
3-1-'39
11-1-'39
8-1-'41
9-2-'41

STANDARD No. 3 COMBINATION INLET-MANHOLE

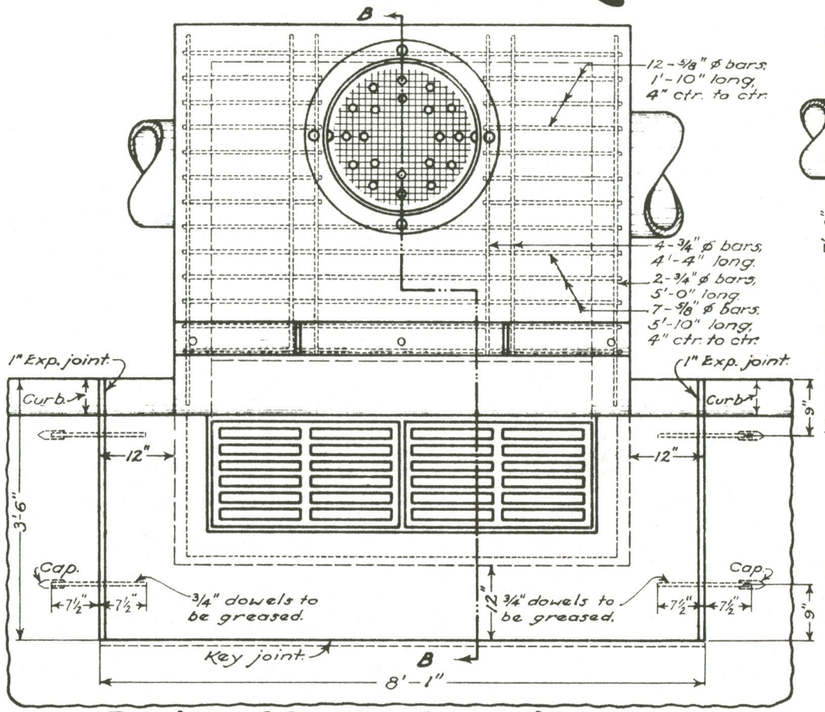

PLAN OF INLET-MANHOLE AND PAVEMENT JOINTS

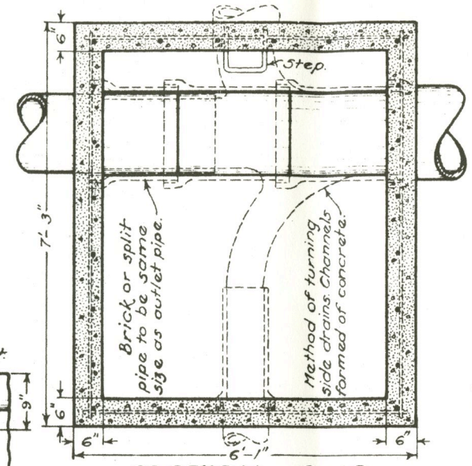

SECTION C-C

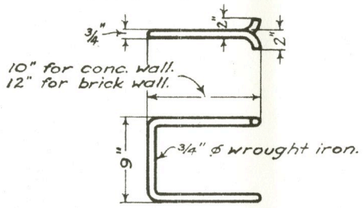

STEP

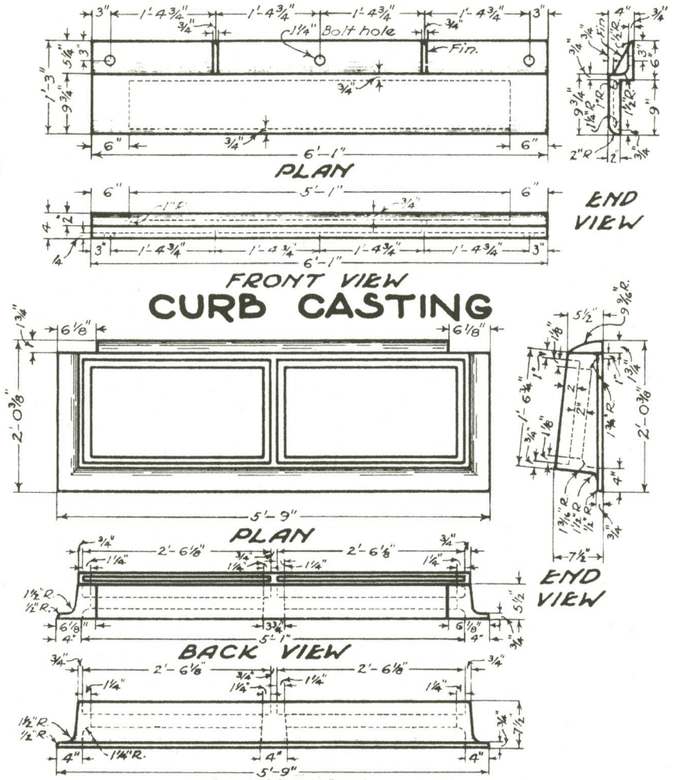

NOTES

CASTINGS shall be of cast iron in accordance with Material Details. The designs shall be essentially the same and equally as strong as those shown hereon and shall be given one coat of asphaltum paint as per specifications.

REINFORCING steel in walls shall be ½" round bars at 12" centers and vertical in each corner. Top to be reinforced as shown hereon.

CONCRETE shall be Class "C".

BRICK side walls, when used in place of reinforced concrete, shall be 8" in thickness, laid in Portland cement mortar, every sixth course to be a stretcher course, and to be plastered on the inside and outside with 1-2 cement mortar ½" thick.

BOTTOM of manhole shall be Class "C" concrete.

Channel sections in the manhole shall be constructed of split pipe or brick except curved sections which may be built by forming a channel in the concrete.

STEPS shall be of good quality wrought iron in accordance with Material Details, free from cracks and shall be given one coat of asphaltum paint as per specifications.

PAVEMENT:— The 8'-1" x 3'-6" portion blocked out of the pavement shall be placed after the casting has been set but shall be paid for as part of the pavement.

INLET CASTINGS

WEIGHTS approximately:—

Curb casting	320 lbs.
Gutter frame	650 lbs.
Two grates	280 lbs.

BEARING AREAS of frame and grate shall be so fitted and finished as to provide a firm and even seat for all portions of the grate in the frame. No projections shall exist on bearing areas of either casting, and each grate shall seat in its frame without rocking. Frames and grates shall be fitted, matched and marked before delivery to the project.

MANHOLE CASTINGS

WEIGHT approximately:—

Frame and cover	250 lbs.

SETTING OF CASTING:— The base of the frame shall be set in a full bed of Portland cement mortar and so adjusted as to conform to the finished grade and slope of the adjacent surface.

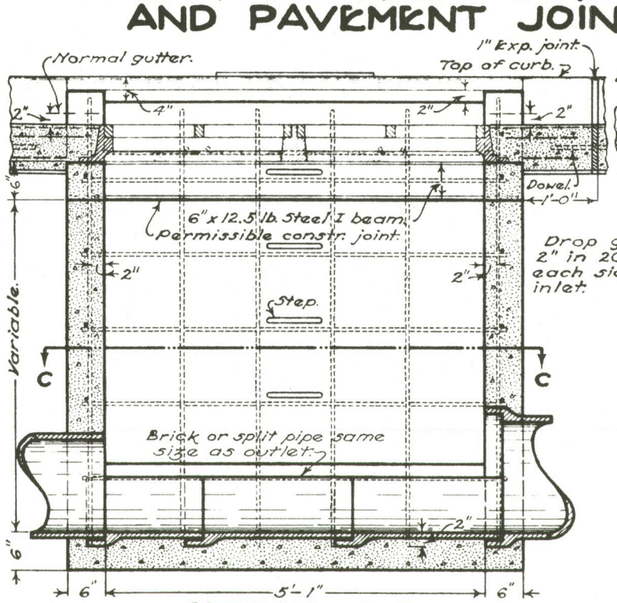

SECTION A-A

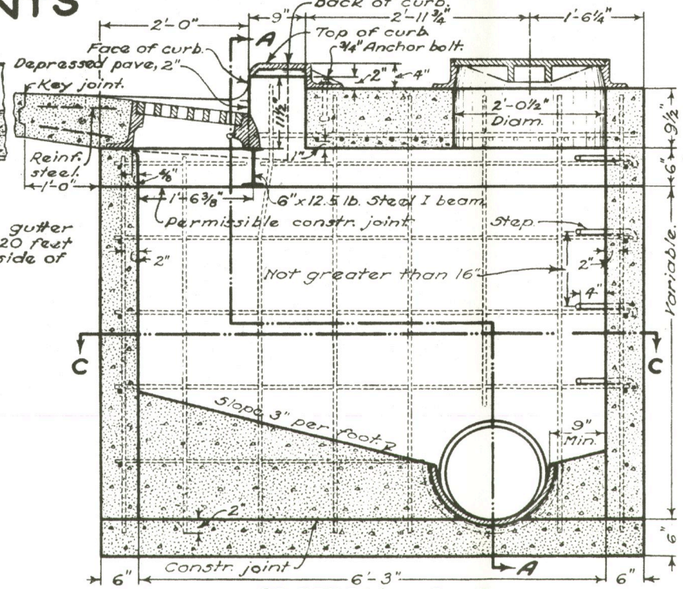

SECTION B-B

INLET-MANHOLE

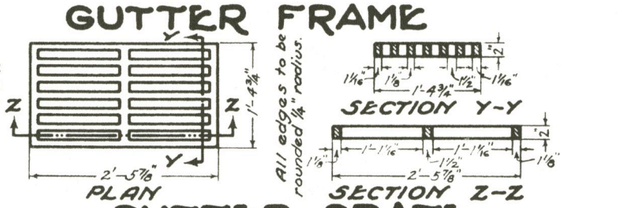

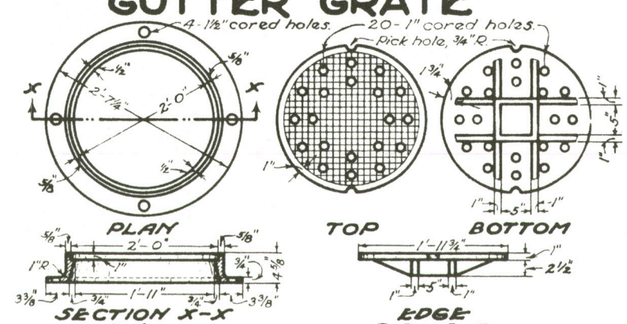

BUREAU OF LOCATION AND DESIGN
OHIO DEPARTMENT OF HIGHWAYS

INLET-MANHOLE

STANDARD CONSTRUCTION DRAWING

I-8 M.H. No. 3

APPROVED O.G.J. CHIEF ENGINEER

DATE
10-1933
4-1934
2-20-36
7-1-38
12-15-38
3-1-39
11-1-39
8-1-41
9-2-41
7-1-47

STANDARD No. 3 COMBINATION INLET-MANHOLE

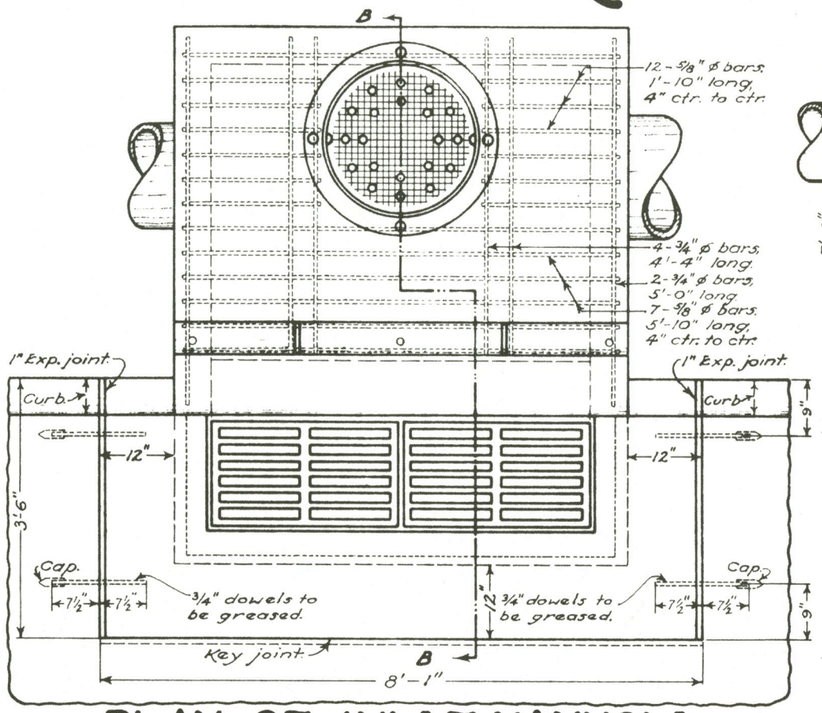

PLAN OF INLET-MANHOLE AND PAVEMENT JOINTS

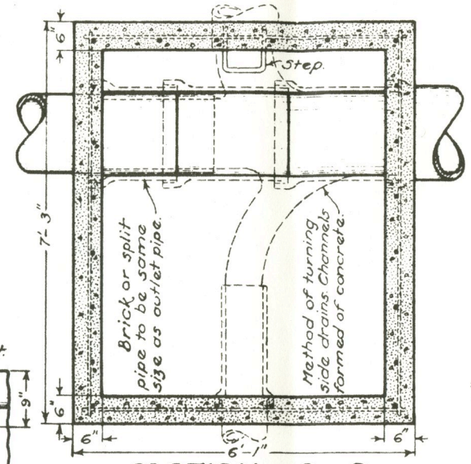

SECTION C–C

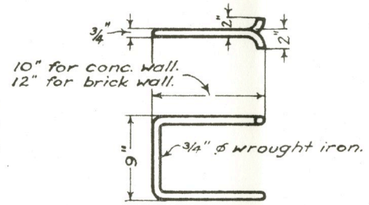

STEP

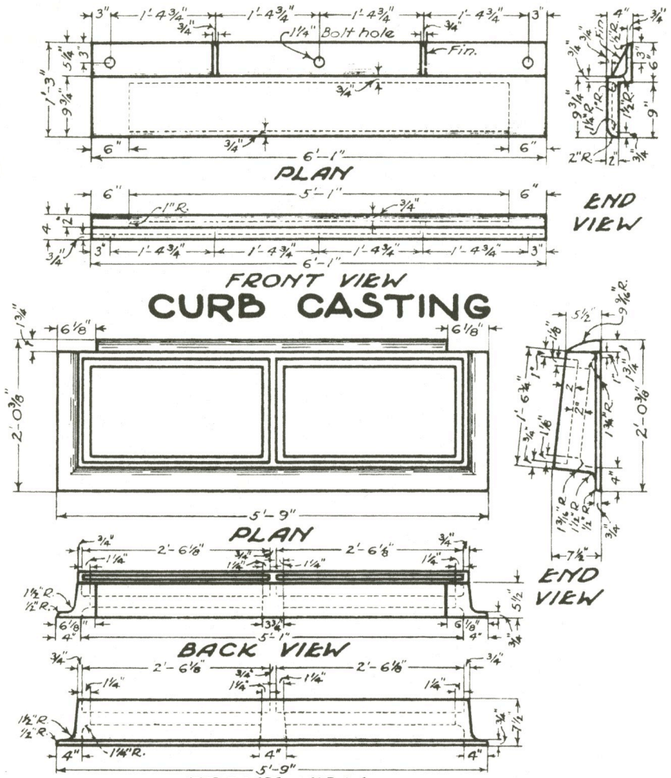

CURB CASTING

GUTTER FRAME

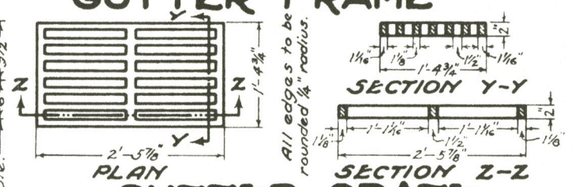

GUTTER GRATE

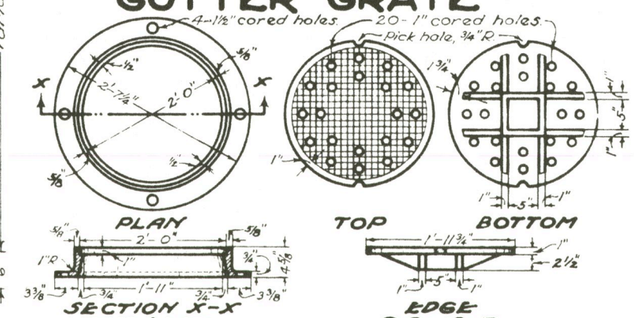

FRAME MANHOLE CASTINGS

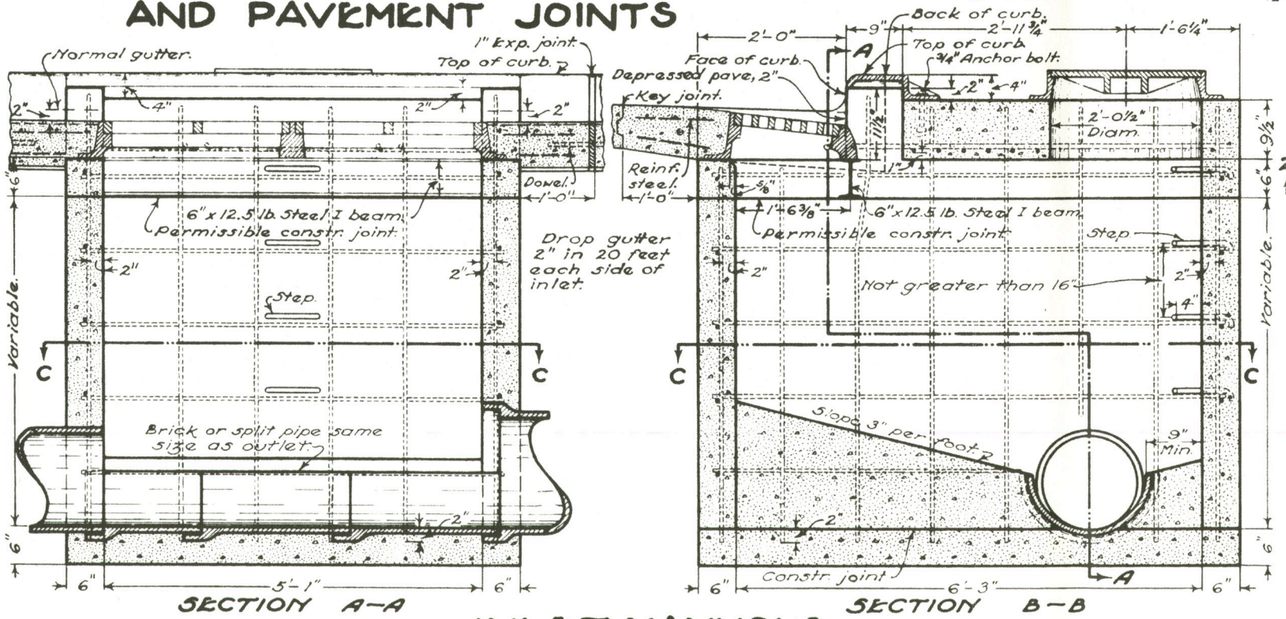

INLET-MANHOLE

NOTES

CASTINGS shall be of cast iron in accordance with Material Details. The designs shall be essentially the same and equally as strong as those shown hereon and shall be given one coat of asphaltum paint as per specifications.

REINFORCING steel in walls shall be ½" round bars at 12" centers and vertical in each corner. Top to be reinforced as shown hereon.

CONCRETE shall be Class "C".

BRICK side walls, when used in place of reinforced concrete, shall be 8" in thickness, laid in Portland cement mortar, every sixth course to be a stretcher course.

BOTTOM of manhole shall be Class "C" concrete.

Channel sections in the manhole shall be constructed of split pipe or brick except curved sections which may be built by forming a channel in the concrete.

STEPS shall be of good quality wrought iron in accordance with Material Details, free from cracks and shall be given one coat of asphaltum paint as per specifications.

PAVEMENT:— The 8'-1" x 3'-6" portion blocked out of the pavement shall be placed after the casting has been set but shall be paid for as part of the pavement.

INLET CASTINGS

WEIGHTS approximately:—

Curb casting	320 lbs.
Gutter frame	650 lbs.
Two grates	280 lbs.

BEARING AREAS of frame and grate shall be so fitted and finished as to provide a firm and even seat for all portions of the grate in the frame. No projections shall exist on bearing areas of either casting, and each grate shall seat in its frame without rocking. Frames and grates shall be fitted, matched and marked before delivery to the project.

MANHOLE CASTINGS

WEIGHT approximately:—

Frame and cover	250 lbs.

SETTING OF CASTING:— The base of the frame shall be set in a full bed of Portland cement mortar and so adjusted as to conform to the finished grade and slope of the adjacent surface.

BUREAU OF LOCATION AND DESIGN
OHIO DEPARTMENT OF HIGHWAYS

INLET-MANHOLE

STANDARD CONSTRUCTION DRAWING

I-8 M.H.
No. 3

APPROVED K.L.R. CHIEF ENGINEER

DATE
10-1933
4-1934
2-20-36
7-1-38
12-15-38
3-1-39
11-1-39
8-1-41
9-2-41
7-1-47
1-2-51

STANDARD No. 3 COMBINATION INLET-MANHOLE

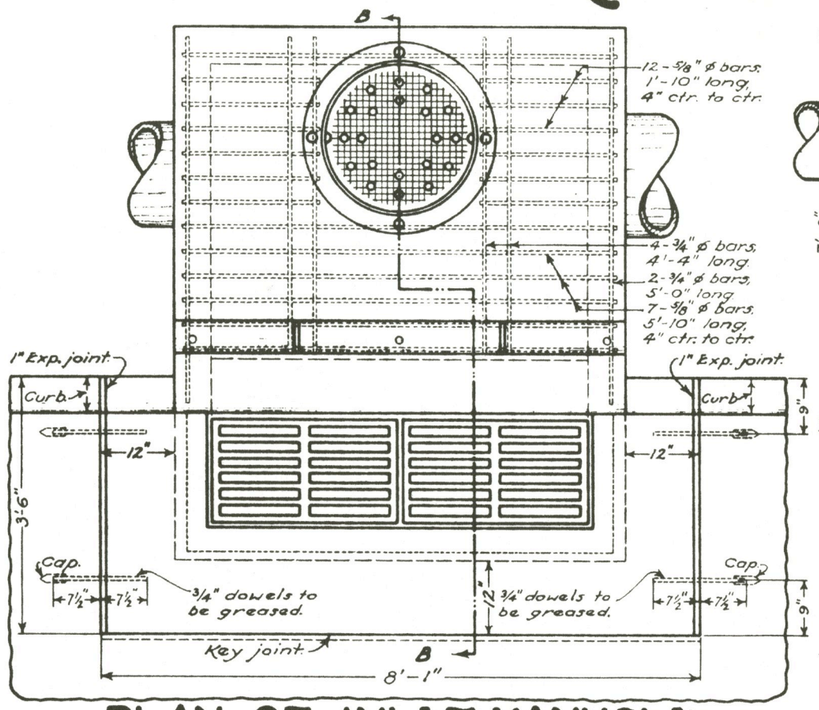

PLAN OF INLET-MANHOLE AND PAVEMENT JOINTS

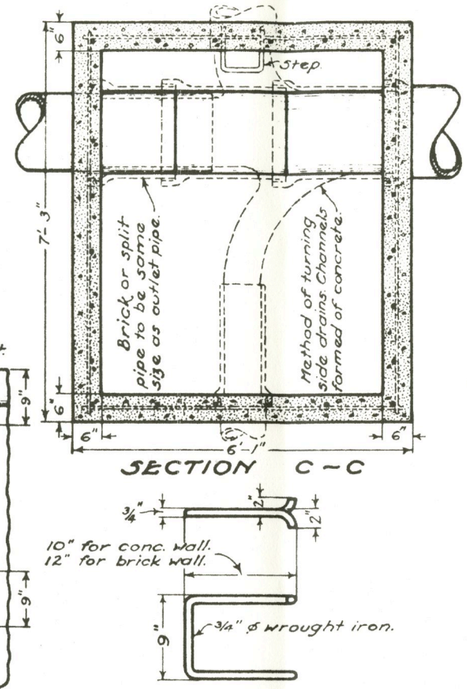

SECTION C-C

STEP

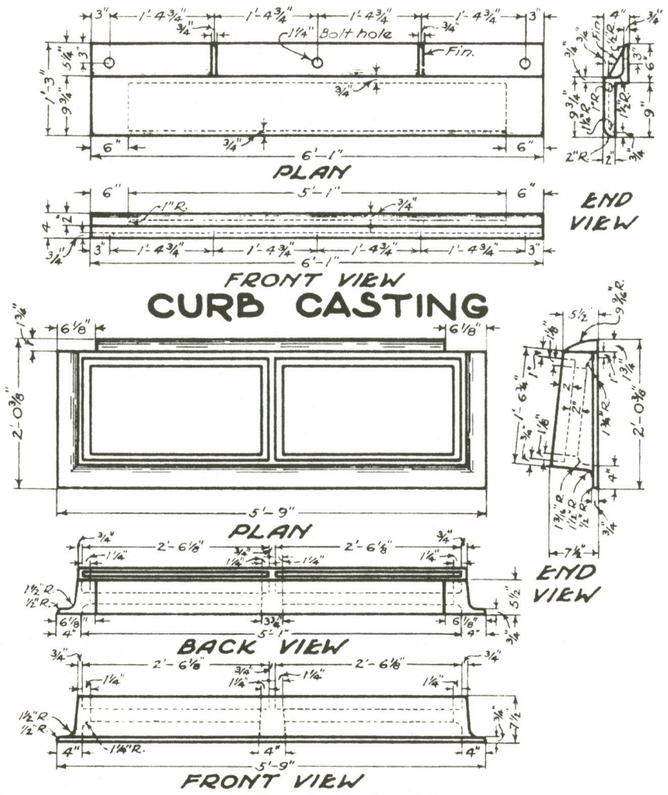

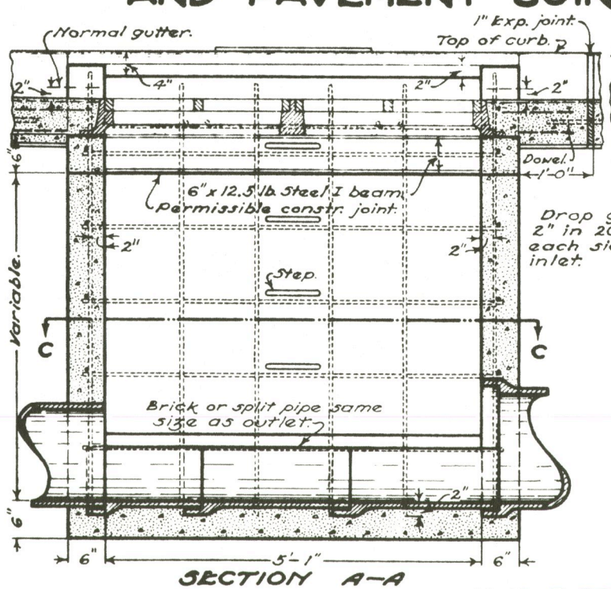

SECTION A-A

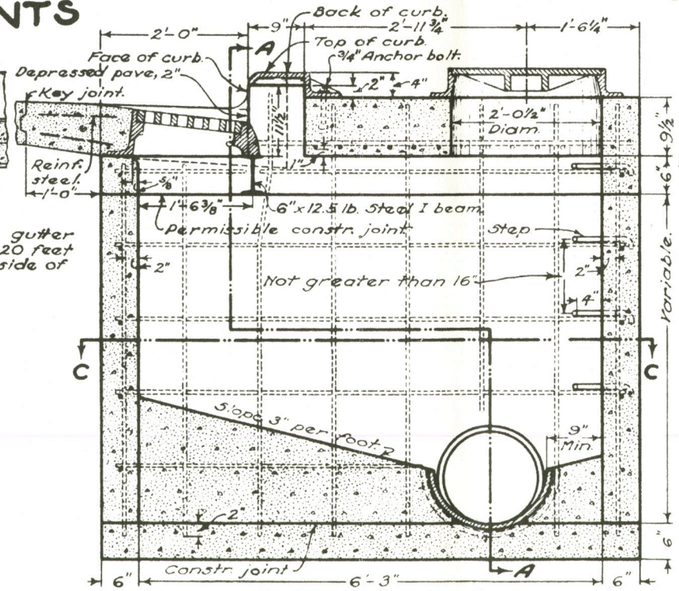

SECTION B-B

INLET-MANHOLE

NOTES

CASTINGS shall be of cast iron in accordance with Material Details. The designs shall be essentially the same and equally as strong as those shown hereon and shall be given one coat of asphaltum paint as per specifications.

REINFORCING steel in walls shall be 1/2" round bars at 12" centers and vertical in each corner. Top to be reinforced as shown hereon.

CONCRETE shall be Class "C".

BRICK side walls, when used in place of reinforced concrete, shall be 8" in thickness, laid in Portland cement mortar, every sixth course to be a stretcher course.

BOTTOM of manhole shall be Class "C" concrete.

Channel sections in the manhole shall be constructed of split pipe or brick except curved sections which may be built by forming a channel in the concrete.

STEPS shall be of good quality wrought iron in accordance with Material Details, free from cracks and shall be given one coat of asphaltum paint as per specifications.

PAVEMENT:—The 8'-1" x 3'-6" portion blocked out of the pavement shall be placed after the casting has been set but shall be paid for as part of the pavement.

INLET CASTINGS

WEIGHTS approximately:—

Curb casting	320 lbs.
Gutter frame	650 lbs.
Two grates	270 lbs.

BEARING AREAS of frame and grate shall be so fitted and finished as to provide a firm and even seat for all portions of the grate in the frame. No projections shall exist on bearing areas of either casting, and each grate shall seat in its frame without rocking. Frames and grates shall be fitted, matched and marked before delivery to the project.

MANHOLE CASTINGS

WEIGHT approximately:—

Frame and cover	250 lbs.

SETTING OF CASTING:—The base of the frame shall be set in a full bed of Portland cement mortar and so adjusted as to conform to the finished grade and slope of the adjacent surface.

BUREAU OF LOCATION AND DESIGN
OHIO DEPARTMENT OF HIGHWAYS

INLET-MANHOLE

STANDARD CONSTRUCTION DRAWING

I-8 M.H. No. 3

APPROVED K.L.R. CHIEF ENGINEER

DATE
10-1933
4-1934
2-20-36
7-1-38
12-15-38
3-1-39
11-1-39
8-1-41
9-2-41
7-1-47
1-2-51
5-15-51

STANDARD No. 3 COMBINATION INLET-MANHOLE

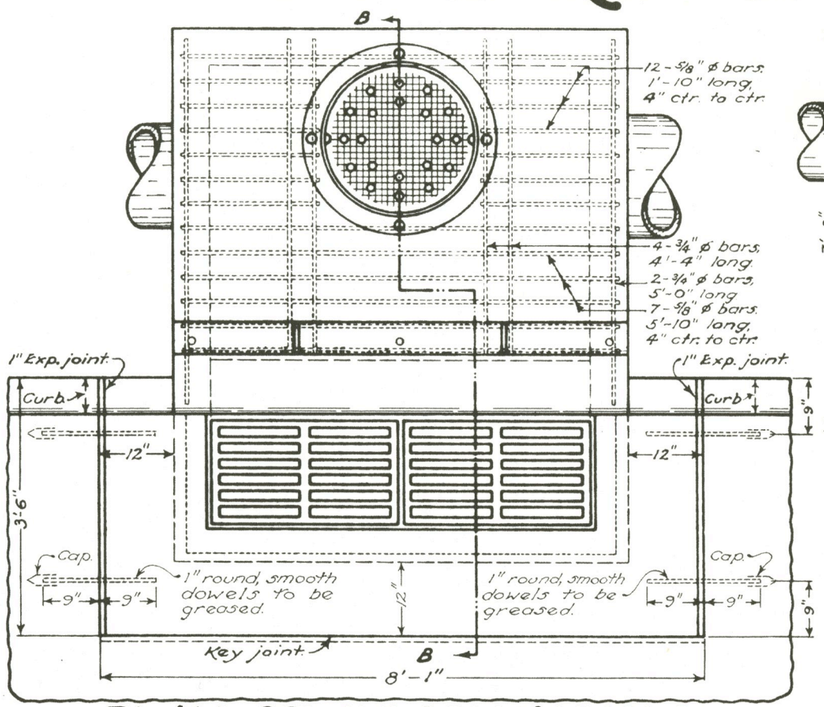

PLAN OF INLET-MANHOLE AND PAVEMENT JOINTS

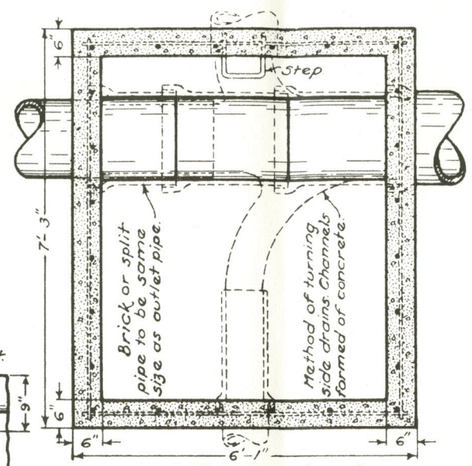

SECTION C-C

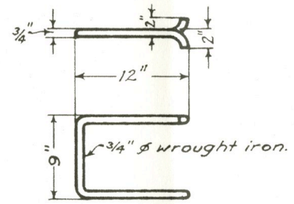

STEP

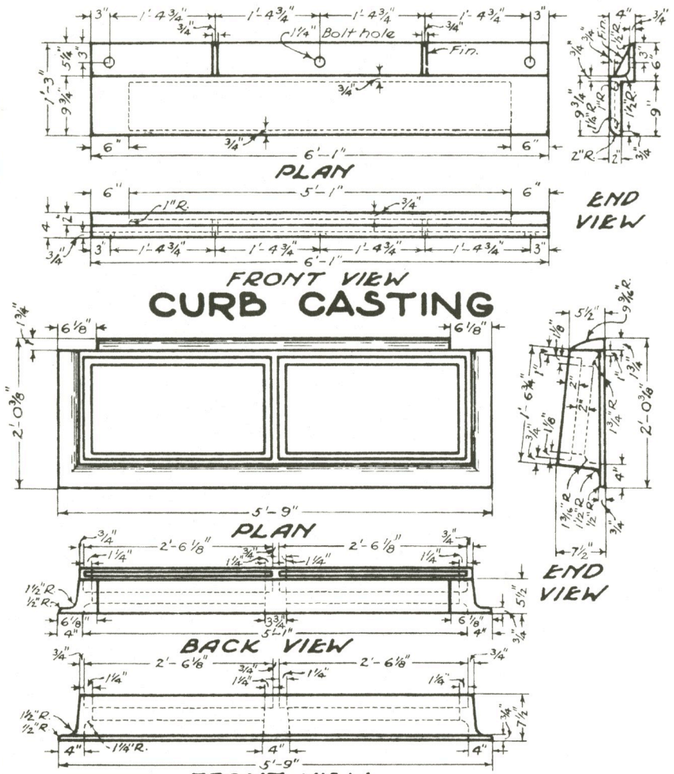

CURB CASTING

GUTTER FRAME

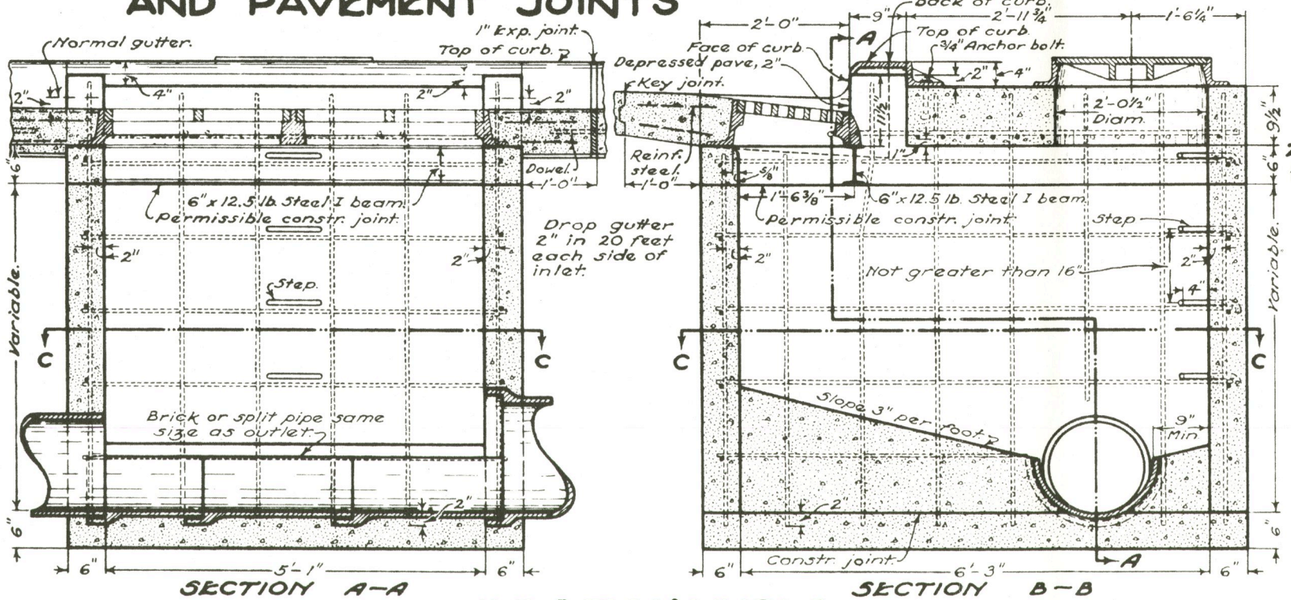

INLET-MANHOLE

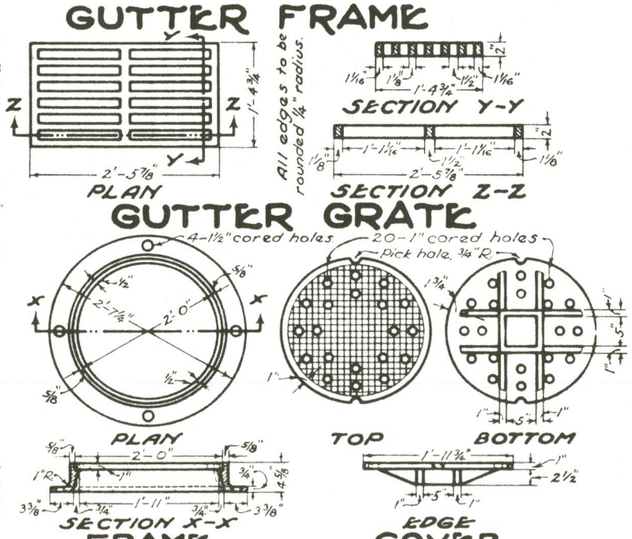

GUTTER GRATE

FRAME
COVER
MANHOLE CASTINGS

NOTES

CASTINGS shall be of cast iron in accordance with Material Details. The designs shall be essentially the same and equally as strong as those shown hereon and shall be given one coat of asphaltum paint as per specifications.

REINFORCING steel in walls shall be 1/2" round bars at 12" centers and vertical in each corner. Top to be reinforced as shown hereon.

CONCRETE shall be Class "C".

BRICK side walls, when used in place of reinforced concrete, shall be 8" in thickness, laid in Portland cement mortar, every sixth course to be a stretcher course.

BOTTOM of manhole shall be Class "C" concrete.

Channel sections in the manhole shall be constructed of split pipe or brick except curved sections which may be built by forming a channel in the concrete.

STEPS shall be of good quality wrought iron in accordance with Material Details, free from cracks and shall be given one coat of asphaltum paint as per specifications.

PAVEMENT:—The 8'-1" x 3'-6" portion blocked out of the pavement shall be placed after the casting has been set but shall be paid for as part of the pavement.

INLET CASTINGS

WEIGHTS, minimum:—

Curb casting	305 lbs.
Gutter frame	590 lbs.
Two grates	254 lbs.

BEARING AREAS of frame and grate shall be so fitted and finished as to provide a firm and even seat for all portions of the grate in the frame. No projections shall exist on bearing areas of either casting, and each grate shall seat in its frame without rocking. Frames and grates shall be fitted, matched and marked before delivery to the project.

MANHOLE CASTINGS

WEIGHT, minimum:—

Frame and cover	240 lbs.

SETTING OF CASTING:—The base of the frame shall be set in a full bed of Portland cement mortar and so adjusted as to conform to the finished grade and slope of the adjacent surface.

BUREAU OF LOCATION AND DESIGN
OHIO DEPARTMENT OF HIGHWAYS

INLET-MANHOLE

STANDARD CONSTRUCTION DRAWING

I-8 M.H. No. 3

APPROVED K.L.R. CHIEF ENGINEER

DATE
10-1933
4-1934
2-20-36
7-1-38
12-15-38
3-1-39
11-1-39
8-1-41
9-2-41
7-1-47
1-2-51
5-15-51
5-1-52

STANDARD No. 3 COMBINATION INLET-MANHOLE

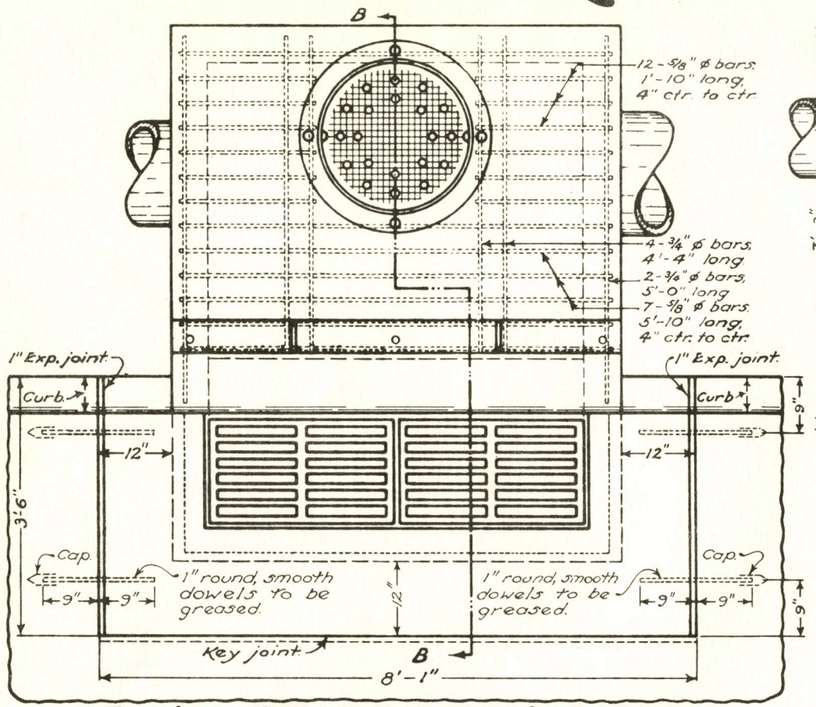

PLAN OF INLET-MANHOLE AND PAVEMENT JOINTS

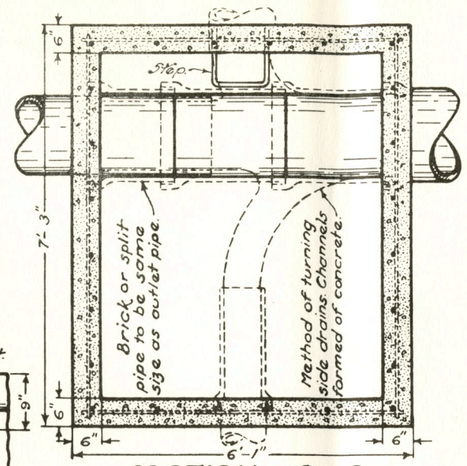

SECTION C-C

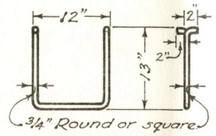

STEP DETAIL

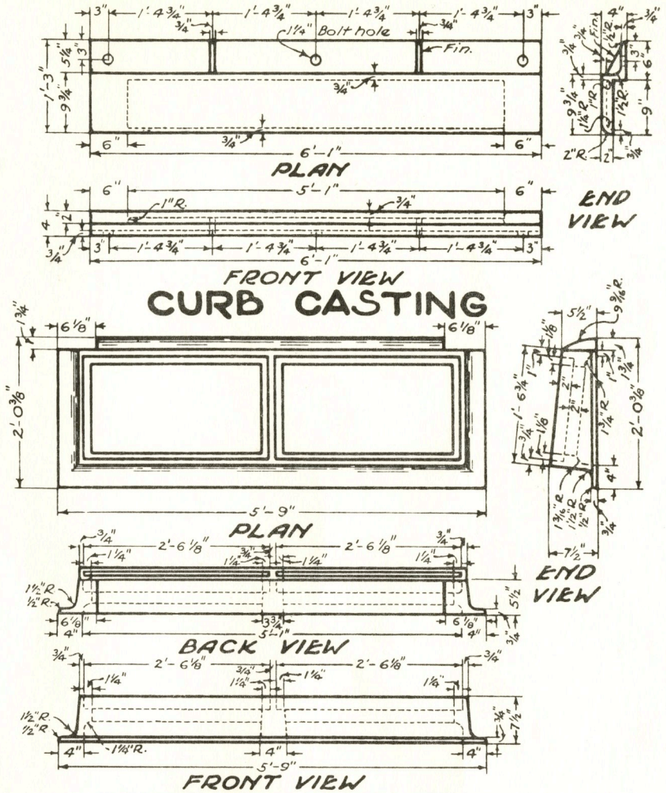

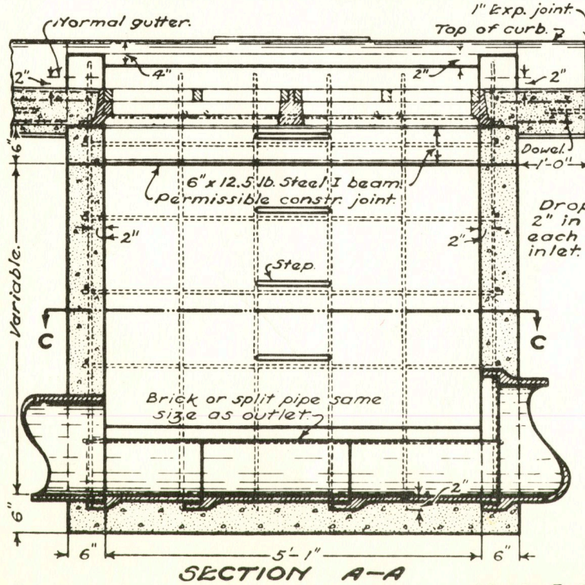

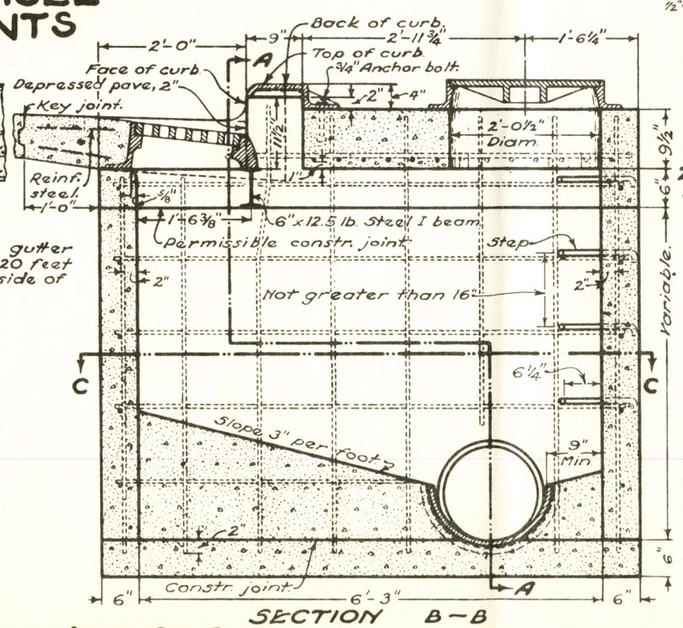

INLET-MANHOLE

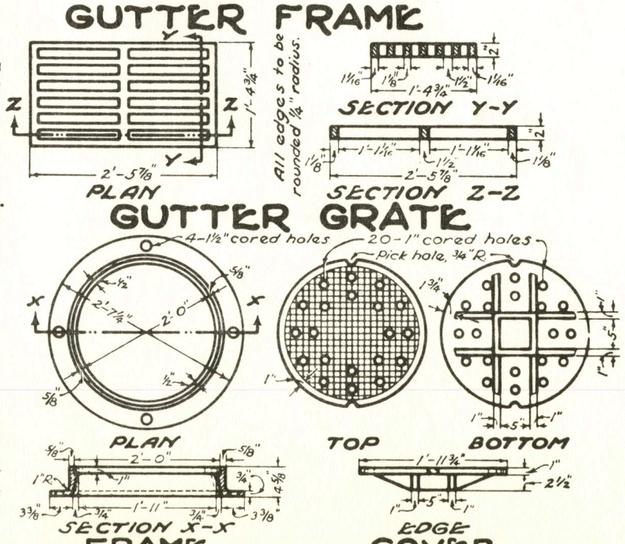

NOTES

CASTINGS shall meet the requirements of Item I-8. The design shall be essentially the same and equally as strong as those shown hereon and shall be given one coat of paint as per specifications.

REINFORCING steel in walls shall be 1/2" round bars at 12" centers and vertical in each corner. Top to be reinforced as shown hereon.

CONCRETE cast in place shall be Class "C".

BRICK OR CONCRETE BLOCK side walls, when used in place of reinforced concrete, shall be 8" in thickness, laid in Portland cement mortar, every sixth brick course to be a stretcher course.

BOTTOM of manhole shall be Class "C" concrete.

Channel sections in the manhole shall be constructed of split pipe or brick except curved sections which may be built by forming a channel in the concrete.

STEPS shall be of wrought iron or modular iron meeting the requirements of Item I-8 and shall be given one coat of paint Sec. M-9.18 or Sec. M-9.19.

PAVEMENT:- The 8'-1" x 3'-6" portion blocked out of the pavement shall be placed after the casting has been set but shall be paid for as part of the pavement.

INLET CASTINGS minimum weights,

Curb casting	305 pounds
Gutter frame	590 pounds
Two grates	254 pounds

BEARING AREAS of frame and grate shall be so fitted and finished as to provide a firm and even seat for all portions of the grate in the frame. No projections shall exist on bearing areas of either casting, and each grate shall seat in its frame without rocking. Frames and grates shall be fitted, matched and marked before delivery to the project.

MANHOLE CASTINGS minimum weight,

Frame and cover 240 pounds.

SETTING OF CASTING:- The base of the frame shall be set in a full bed of Portland cement mortar and so adjusted as to conform to the finished grade and slope of the adjacent surface.

BUREAU OF LOCATION AND DESIGN
OHIO DEPARTMENT OF HIGHWAYS

INLET-MANHOLE

STANDARD CONSTRUCTION DRAWING

I-8 M.H. No. 3

APPROVED [signature] ENGR. L. & D.

DATE
10-1933
4-1934
2-20-36
7-1-38
12-15-38
3-1-39
11-1-39
8-1-41
9-2-41
7-1-47
1-2-51
5-15-51
5-1-52
1-26-59