STANDARD SIDE DITCH INLETS

CONSTRUCTED ON PIPE LESS THAN 12" DIAMETER

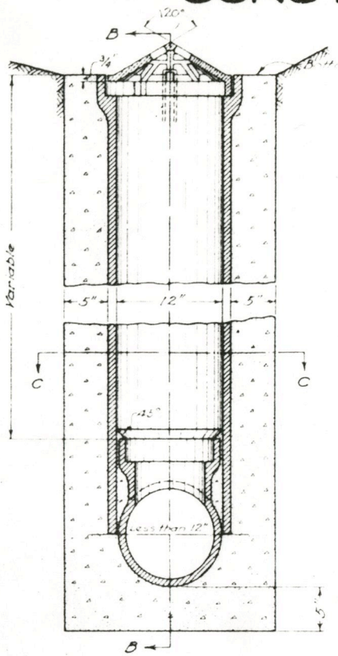

SECTION A-A

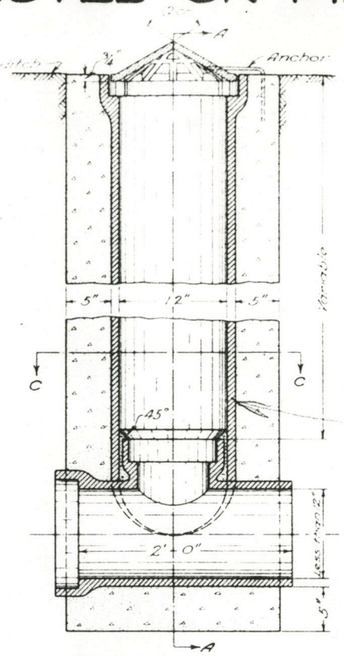

SECTION B-B

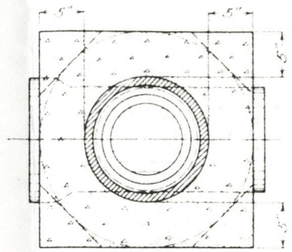

SECTION C-C

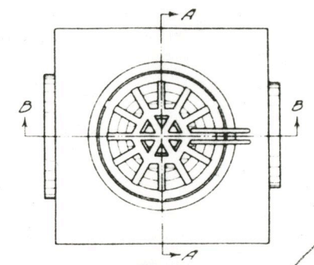

PLAN

NOTES

CASTING:—
Cast iron inlet cover to be essentially the same and equally as strong as the one shown here.
Casting shall be painted before leaving foundry.

ANCHOR FOR COVER:—
Anchor to be a 3/8" rod, 2' long, bent around grate as shown and anchored into concrete casing.

CONCRETE:—
Concrete to be 1:5½ mix.
Concrete casing for riser may be square, round or hexagonal in shape.

RISER PIPE:—
Riser pipe in all cases shall be 12" in diameter regardless of size of carrying line.

TEE:—
Where carrying line is not continuous through inlet, the upstream opening of the tee shall be properly plugged, using vitrified stopper and sealed joint.

~~Which kind of pipe?~~

CONSTRUCTED ON PIPE 12" DIAMETER OR OVER

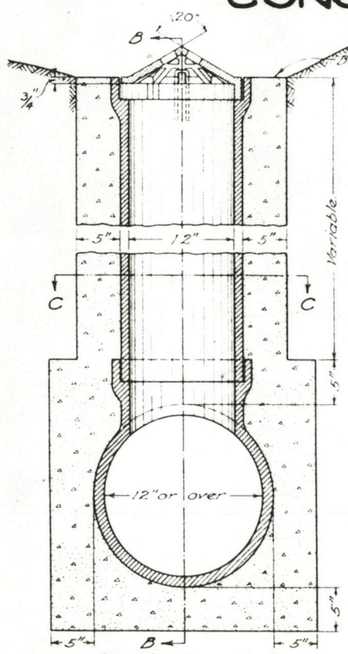

SECTION A-A

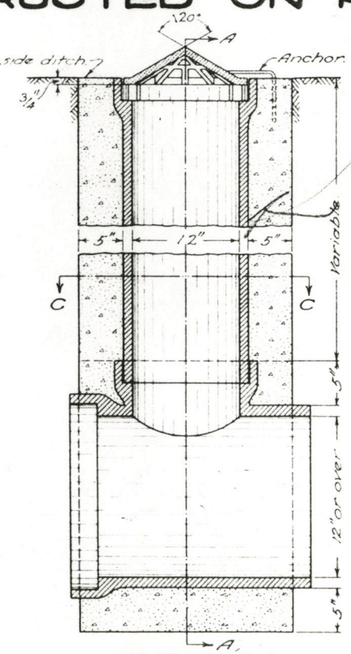

SECTION B-B

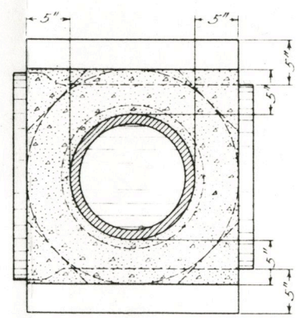

SECTION C-C

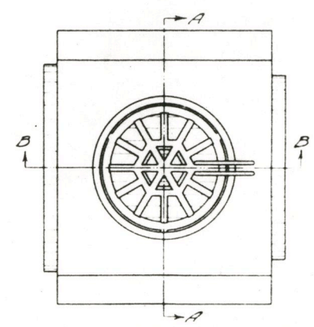

PLAN

BUREAU OF CONSTRUCTION
OHIO
DEPARTMENT OF HIGHWAYS

SIDE DITCH INLETS

STANDARD CONSTRUCTION DRAWING I-8 I. No. 1

APPROVED E. H. CHIEF ENGR. CONST.

AUG 1933

STANDARD SIDE DITCH INLETS

CONSTRUCTED ON PIPE LESS THAN 12" DIAMETER

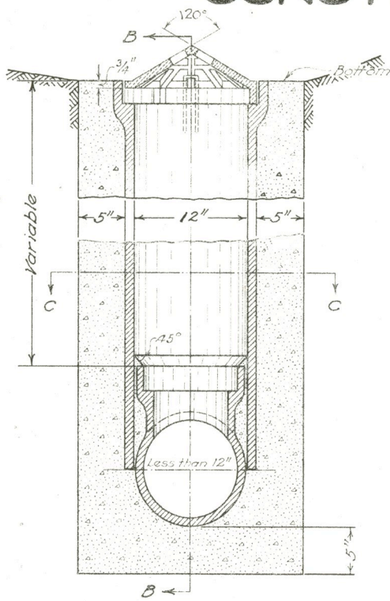

SECTION A-A

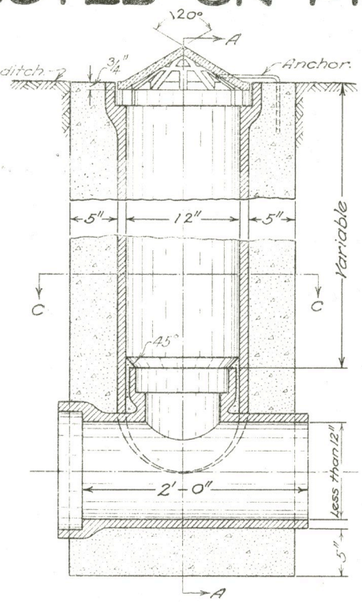

SECTION B-B

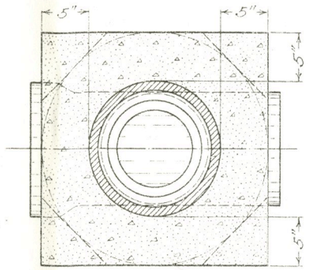

SECTION C-C

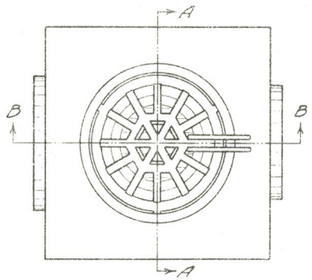

PLAN

NOTES

CASTING shall be of cast iron in accordance with Material Details. The design shall be essentially the same and equally as strong as the one shown hereon, and shall be given one coat of asphaltum paint as per specifications. Weight approximately 25 pounds.

ANCHOR for casting to be a 3/8 in. rod, 2 ft. long, bent around grate as shown and anchored into concrete casing.

CONCRETE casing for riser may be square, round or hexagonal in shape, and shall be 1-5½ mix.

RISER PIPE in all cases shall be 12 in. in diameter regardless of size of carrying line.

TEE :- Where carrying line is not continuous through inlet the upstream opening of the tee shall be properly plugged using vitrified stopper and sealed joint.

CONSTRUCTED ON PIPE 12" DIAMETER OR OVER

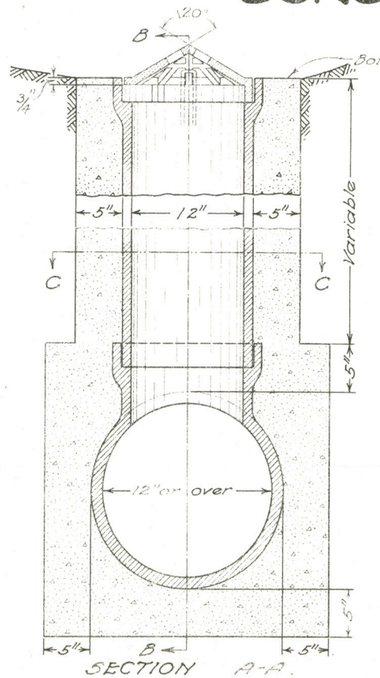

SECTION A-A

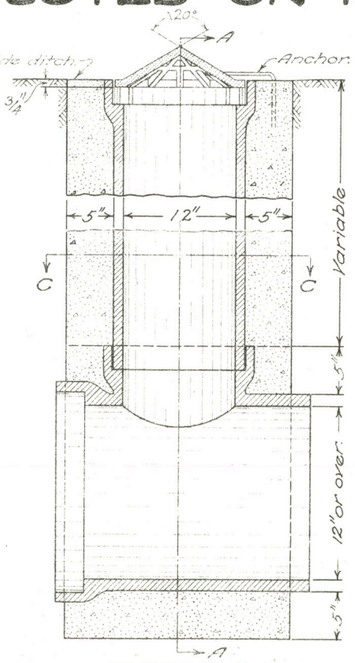

SECTION B-B

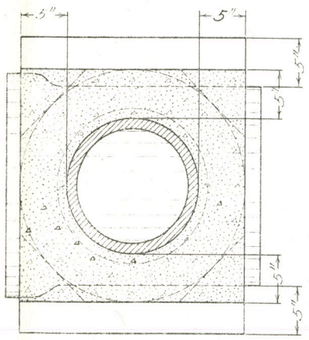

SECTION C-C

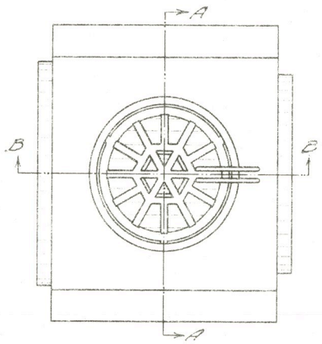

PLAN

BUREAU OF LOCATION & DESIGN
OHIO DEPARTMENT OF HIGHWAYS

8-1933
1-1-'36

SIDE DITCH INLETS

STANDARD CONSTRUCTION DRAWING

I-8 I.
No. 1

APPROVED K. L. R. CHIEF ENGINEER

STANDARD No. 1 SIDE DITCH INLETS

CONSTRUCTED ON PIPE LESS THAN 12" DIAMETER

CONSTRUCTED ON PIPE 12" DIAMETER OR OVER

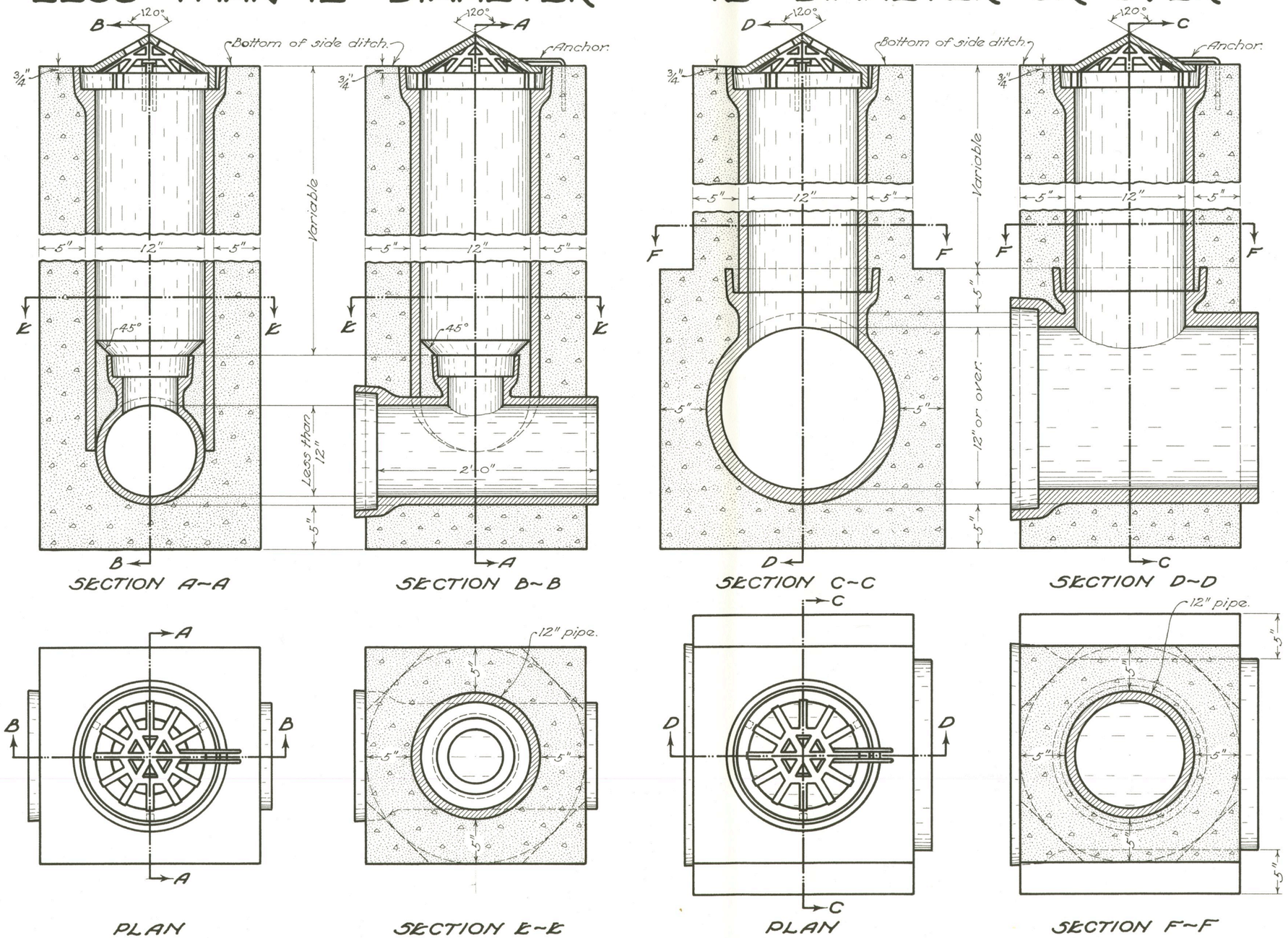

NOTES

CASTING shall be of cast iron in accordance with Material Details. The design shall be essentially the same and equally as strong as the one shown hereon, and shall be given one coat of asphaltum paint as per specifications. Weight approximately 25 pounds.

ANCHOR for casting to be a 3/8 in. rod, 2 ft. long, bent around grate as shown and anchored into concrete casing.

CONCRETE casing for riser may be square, round or hexagonal in shape, and shall be Class "C."

RISER PIPE in all cases shall be 12 in. in diameter regardless of size of carrying line.

TEE:- Where carrying line is not continuous through inlet the upstream opening of the tee shall be properly plugged using vitrified stopper and sealed joint.

BUREAU OF LOCATION & RIGHT OF WAY
OHIO DEPARTMENT OF HIGHWAYS

SIDE DITCH INLETS

DATE
8-1933
1-1-36
3-1-39

STANDARD CONSTRUCTION DRAWING I-8 I. No. 1

APPROVED G.R.L. CHIEF ENGINEER.

STANDARD No. 1 SIDE DITCH INLETS

CONSTRUCTED ON PIPE LESS THAN 12" DIAMETER

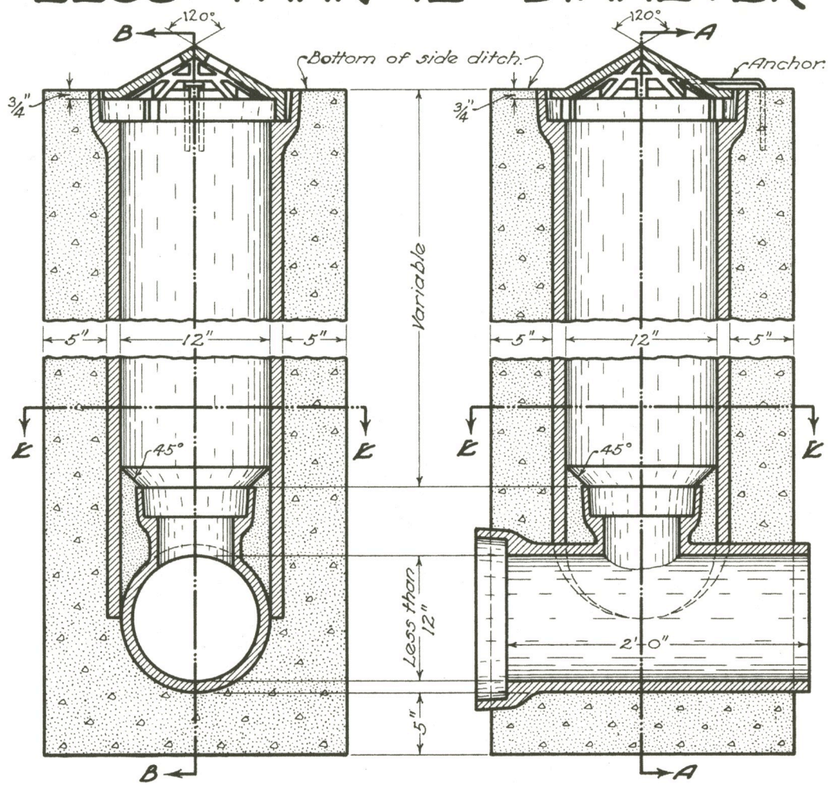

SECTION A-A

SECTION B-B

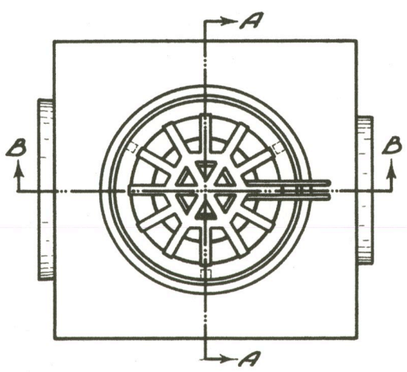

PLAN

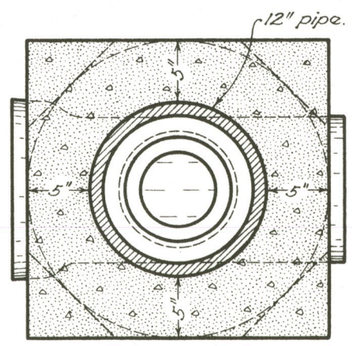

SECTION E-E

CONSTRUCTED ON PIPE 12" DIAMETER OR OVER

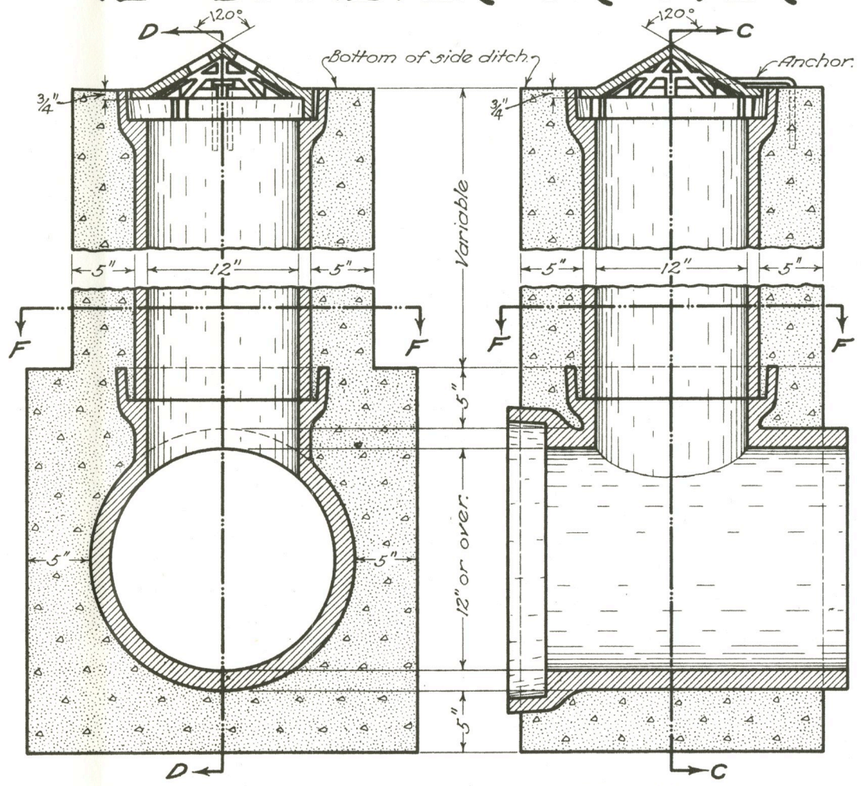

SECTION C-C

SECTION D-D

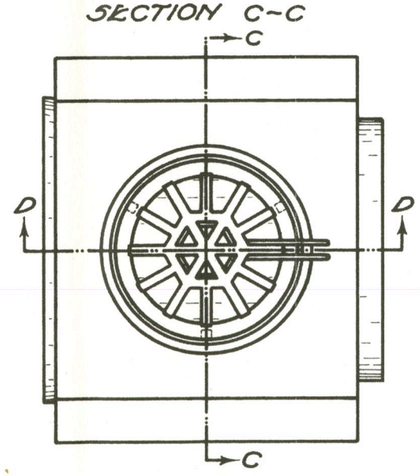

PLAN

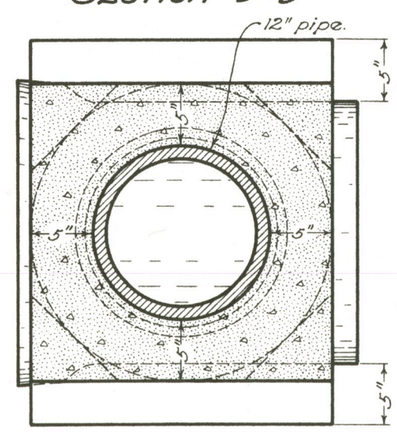

SECTION F-F

NOTES

CASTING shall be of cast iron in accordance with Material Details. The design shall be essentially the same and equally as strong as the one shown hereon, and shall be given one coat of asphaltum paint as per specifications. Weight: minimum, 22 pounds.

ANCHOR for casting to be a 3/8 in. rod, 2 ft long, bent around grate as shown and anchored into concrete casing.

CONCRETE casing for riser may be square, round or hexagonal in shape, and shall be Class "C."

RISER PIPE in all cases shall be 12 in. in diameter regardless of size of carrying line.

TEE:- Where carrying line is not continuous through inlet the upstream opening of the tee shall be properly plugged using vitrified stopper and sealed joint.

BUREAU OF LOCATION AND DESIGN
OHIO DEPARTMENT OF HIGHWAYS

SIDE DITCH INLETS

DATE
8-1933
1-1-36
3-1-39
5-1-52

STANDARD CONSTRUCTION DRAWING

I-8 I.
No. 1

APPROVED _____ CHIEF ENGINEER

STANDARD No. 1 SIDE DITCH INLETS

CONSTRUCTED ON PIPE LESS THAN 12" DIAMETER

CONSTRUCTED ON PIPE 12" DIAMETER OR OVER

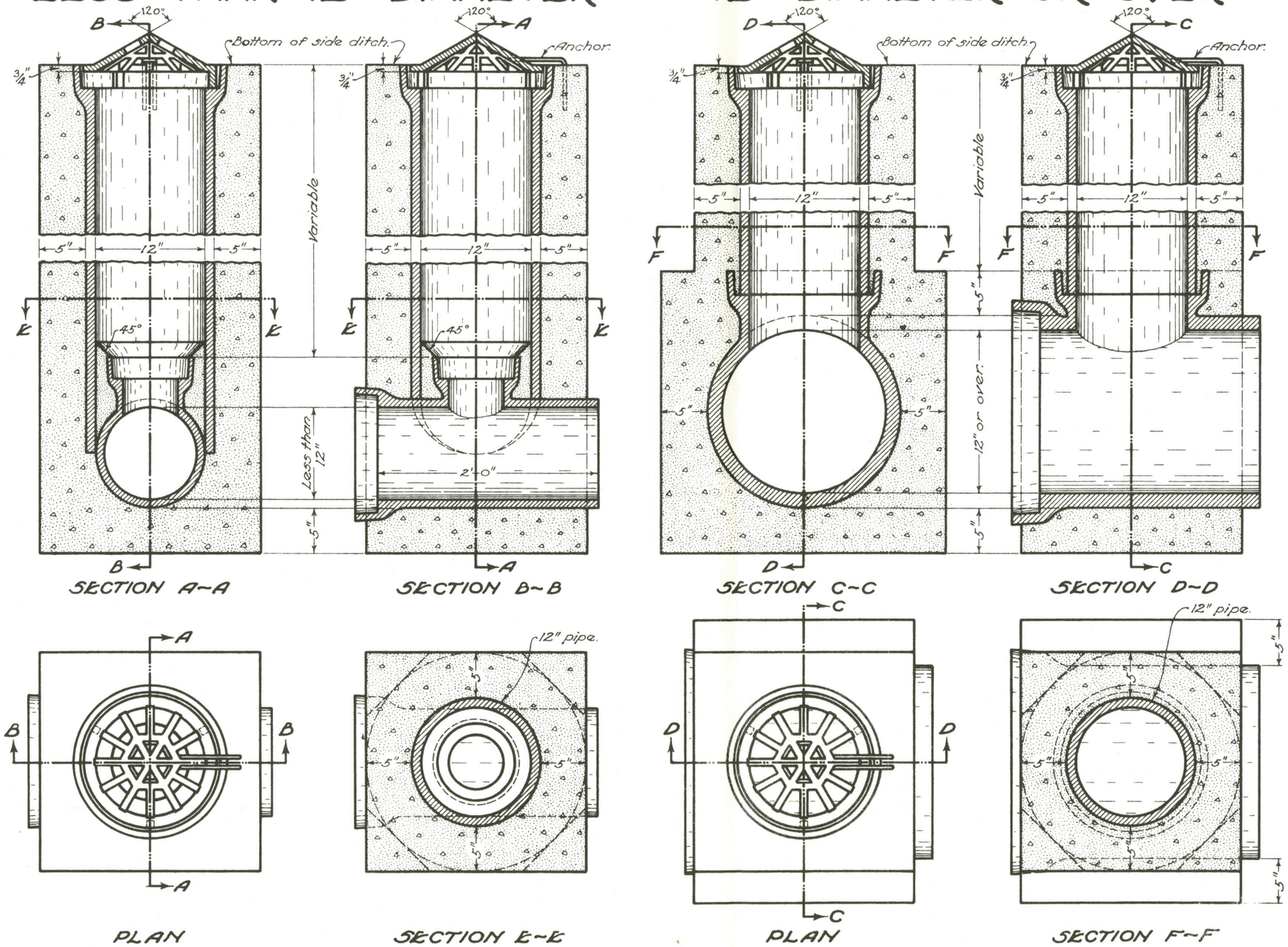

NOTES

CASTINGS shall meet the requirements of Item I-8. The design shall be essentially the same and equally as strong as the one shown hereon, and shall be given one coat of paint as per specifications.
Weight, minimum, 22 pounds.

ANCHOR for casting to be a 3/8 in. rod, 2 ft. long, bent around grate as shown and anchored into concrete casing.

CONCRETE casing for riser may be square, round or hexagonal in shape, and shall be Class "C."

RISER PIPE in all cases shall be 12 in. in diameter regardless of size of carrying line.

TEE:- Where carrying line is not continuous through inlet the upstream opening of the tee shall be properly plugged using vitrified stopper and sealed joint.

BUREAU OF LOCATION AND DESIGN
OHIO DEPARTMENT OF HIGHWAYS

SIDE DITCH INLETS

DATE
8-1933
1-1-36
3-1-39
5-1-52
3-2-59

STANDARD CONSTRUCTION DRAWING

I-8 I.
No. 1

APPROVED [signature] ENGR. L. & D.

STANDARD Nº 1 SIDE DITCH INLETS

CONSTRUCTED ON PIPE LESS THAN 12" DIAMETER

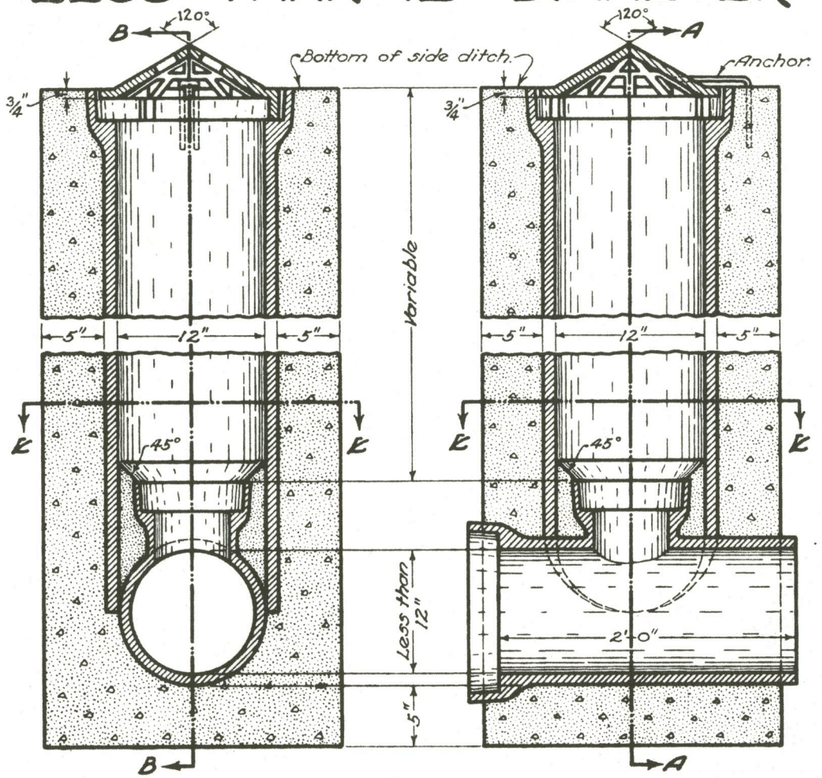

SECTION A-A

SECTION B-B

CONSTRUCTED ON PIPE 12" DIAMETER OR OVER

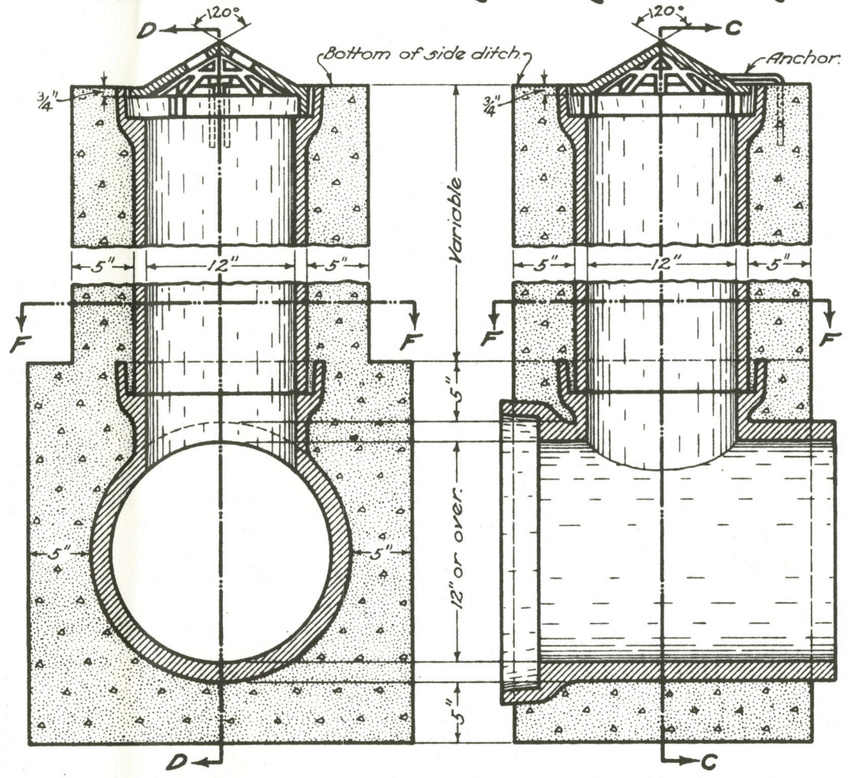

SECTION C-C

SECTION D-D

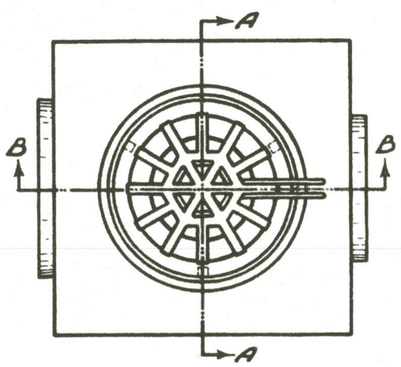

PLAN

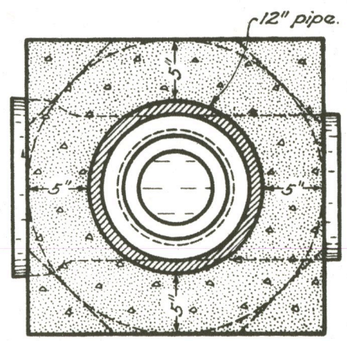

SECTION E-E

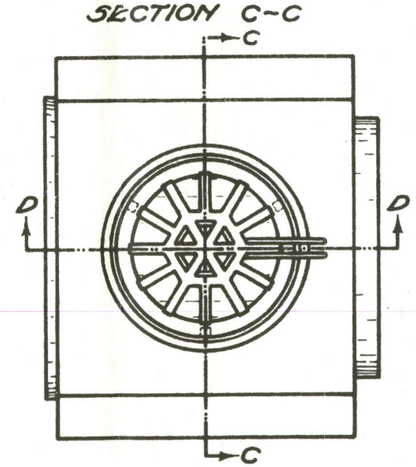

PLAN

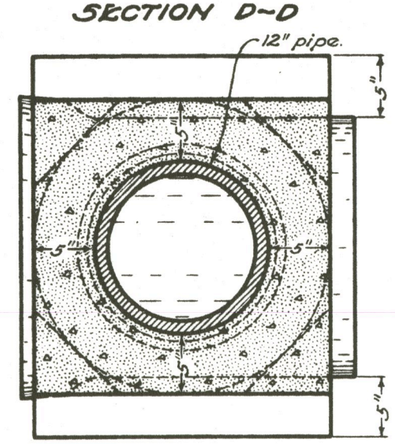

SECTION F-F

NOTES

CASTINGS shall meet the requirements of Item I-8. The design shall be essentially the same and equally as strong as the one shown hereon. Weight, minimum, 22 pounds.

ANCHOR for casting to be a 3/8 in. rod, 2 ft. long, bent around grate as shown and anchored into concrete casing.

CONCRETE casing for riser may be square, round or hexagonal in shape, and shall be Class "C".

RISER PIPE in all cases shall be 12 in. in diameter regardless of size of carrying line.

TEE:- Where carrying line is not continuous through inlet the upstream opening of the tee shall be properly plugged using vitrified stopper and sealed joint.

BUREAU OF LOCATION AND DESIGN
OHIO DEPARTMENT OF HIGHWAYS

SIDE DITCH INLETS

DATE 2-1-'63

STANDARD CONSTRUCTION DRAWING I-8 I. Nº 1

APPROVED R. N. Pickett ENGR. L. & D.

Revised and Number changed to I-1 ; June 1, 1965